In-Line Centrifugal Pumps

INM, INM Duo, INM GenIO, CSV Series

Operating Manual

MDKBK192024

masdaf

masdaf.com

masdaf

TÜV AUSTRIA

CE

EuP COMPLIANT

EC DECLARATION OF CONFORMITY

AT UYGUNLUK BEYANI

Manufacturer / *İmalatçı* : **MAS DAF MAKİNA SANAYİ A.Ş.**

Address / *Adres* : Orta Mah. Atayolu Cad. No: 16 Tuzla - İSTANBUL / TÜRKİYE
Organize Sanayi Bölgesi, Beyköy Beldesi, İstiklal OSB 1 Mah. 5. Cad. Dış Kapı No:7 Merkez/ DÜZCE

Name and address of the person authorised to compile the technical file
Teknik Dosyayı Derleyen Yetkili Kişi ve Adresi
Erhan ÖZDEMİR
Orta Mah. Atayolu Cad. No: 16
Tuzla - İSTANBUL / TÜRKİYE

The undersigned Company certifies under its sole responsibility that the item of equipment specified below satisfies the requirements of the mainly Machinery Directive 2006/42/EC which is apply to it.
The item of equipment identified below has been subject to internal manufacturing checks with monitoring of the final assessment by **MAS DAF MAKİNA SANAYİ A.Ş.**
Aşağıda tanımlanmış olan ürünler için Makine Emniyeti yönetmeliği 2006 / 42 / AT' nin uygulanabilen gerekliliklerinin yerine getirildiğini ve sorumluluğun alınmış olunduğunu beyan ederiz.
Aşağıda tanımlanan ürünler iç üretim kontrollerine bağlı olarak **MAS DAF MAKİNA SANAYİ A.Ş.** *tarafından kontrol edilmiştir.*

Equipment / *Ürün* : Inline Centrifugal Pumps
Hat Tipi Santrifüj Pompalar

Seri / *Model-Tip* : INM, INM Duo, INM GenIO, CSV Series
INM, INM Duo, INM GenIO, CSV Serileri

For pumps supplied with drivers/ *Elektrikli Pompa Üniteleri*
Related Directives / *Yönetmelikler*
2006/42/EC Machinery Directive / **2006/42/AT** *Makine Emniyeti Yönetmeliği*
2014/35/EU Low Voltage Directive / **2014/35/AB** *Alçak Gerilim Yönetmeliği*
2014/30/EU Electromagnetic Compatibility Directive / **2014/30/AB** *Elektromanyetik Uyumluluk Yönetmeliği*
EUP 2009/ 125 /EC Electric Used Products Directive/ *Elektrik Kullanan Ekipmanlar Direktifi (EUP)*
2009/125/EC European Ecodesign Directive, Regulation No: 547/2012 Ecodesign Requirements for Water Pumps / *Avrupa Ekotasarım Direktifi, (SGM-2015/44) 547/2012 No'lu Su Pompalarında Ekotasarım Regülasyonu*

Regulations applied acc. to harmonize standards / *Uygulanan Uyumlaştırılmış Standartlar*
TS EN ISO 12100:2010, TS EN 809+A1, TS EN 60204-1:2018.

We hereby declare that this equipment is intended to be incorporated into, or assembled with other machinery to constitute relevant machinery to comply with essential health and safety requirements of Directive The machinery covered by this declaration must not be put into service until the relevant machinery into which it is to be incorporated has been declared in conformity with provisions of the directive.
Ekipman, uygun bir makina oluşturmak amacıyla diğer ekipmanlar ile birleştirilirken ya da monte edilirken gerekli sağlık ve güvenlik yönetmeliklerine uyulması gerekmektedir.
Bu bildiri kapsamında yönetmelikte belirtilen bütün hükümler yerine getirilmeden makinanın devreye alınmaması gerekmektedir.

Place and date of issue / Yer ve Tarih : İstanbul, 31.01.2025
Name and position of authorized person
Yetkili Kişinin Adı ve Görevi : Erhan ÖZDEMİR
General Manager / Genel Müdür
Signature of authorized person
Yetkili Kişinin İmzası :

TABLE OF CONTENTS Page No

Introduction 06
1. Important Safety Precautions 07
2. General 07
2.1. Definition of Pump and Usage Areas 07
2.2. Performance Information 08
2.3. Warranty Conditions 08
2.4. Test 08
2.5. Pressure Limit 08
3. Safe Operating Conditions 08
3.1. Training of Personnel 09
3.2. Hazardous Conditions That May Occur When One does not Comply With the Safety Instructions 09
3.3. Safety Measures for Operator 09
3.4. Safety Measures for Maintenance and Installation 09
3.5. Spare Parts Replacement 09
4. Technical Information 09
4.1. Design 09
4.2. Construction of Pump Group 10
5. Transport and Storage 10
5.1. Transport 10
5.2. Storage 11
6. Assembly/Installation 11
6.1. Location of Installation 11
6.2. Piping 11
6.3. Motor Connection 13
7. Commissioning, Start up and Operating 14
7.1. Preparations Before Start up 14
7.2. Checking The Direction of Rotation 14
7.3. Start up Procedure 14
7.4. Shut Down Procedure 15

8. Maintenance 15
   8.1. The Checks During the Operation 15
   8.2. Service 16
   8.3. Spare Parts 16
9. Noise Level and Vibration 17
   9.1. Expected Noise Values 17
10. Disassembly, Repair and Reassembly 17
   10.1. Disassembly 18
   10.2. Reassembly 18
11. Information About Frequency Inverter 18
   11.1. Installation Of The Frequency Inverter On The Motor 18
   11.2. Wiring Diagram 19
   11.3. Control Loop Terminals and Functions 19
   11.4. Operation Panel Diagram 21
   11.5. Sensor Connections 22
   11.6. Quick Setting 23
12. Possible Failures, Causes, Solutions 25
13. Tightening Torques 26
14. Forces And Moments at The Pump Flanges 26
15. Sample Plumbing 28
16. Sectional Drawings and Part List 29
17. Exploded Views and Part List 32
18. MEI Value Tables 35

INTRODUCTION

- This manual contains instructions for the installation, operation and maintenance of the INM, INM Duo, INM GenIO, CSV type non-self-priming in-line centrifugal pumps of **MASDAF MAKINA SANAYI A.Ş.**
- Please read carefully this manual and apply all the instructions to operate pumps without problems. Pumps shall be used for their intended duties. In this manual, there are information on operating conditions, installation, starting-up, settings and main controls of pumps.
- These operating and maintenance instructions contain **MASDAF MAKINA SANAYI A.Ş.**`s suggestions. The special operating and maintenance information of the plumbing that a pump is fitted to is not considered in these instructions. This information must be given by the plumbing constructors only.
- **Please refer to instructions of plumbing constructors.**
- Please pay attention to the warnings in this manual and ensure that it is read before the installation-start up process. **MASDAF MAKINA SANAYI A.Ş.** is not responsible for the accidents resulting from negligence.
- If you cannot find an answer to your questions in this manual, it is suggested that you contact **MASDAF MAKINA SANAYI A.Ş.** Please inform us about the rated value and especially the serial number of the pump when you get in contact for help.
- The safety instructions in this manual cover the current national accident protection regulations. Beside all of these, an operation, work and safety measure imposed by the costumer has to be applied.

The Signs Used in This Operation Manual

		Read the instructions carefully in this operating manual and keep it for your future reference.
		Warning sign against the electrical risks
		Sign for the operator's safety

1. IMPORTANT SAFETY PRECAUTIONS

In order to minimize the accidents during the mounting and putting into service of the pump, the following rules have to be applied:

1. Do not work without taking safety measures relevant to equipment. Cable, mask and safety band must be used when necessary.
2. Be sure there is adequate amount of oxygen and there is no toxic gaseous around
3. Before using welding or any electrical equipment make sure that there is no risk of explosion.
4. Check the cleanliness of the area to take care of your help. (Dust, smoke, etc.)
5. Do keep in mind that there is a risk of having accidents related to electricity
6. Do not lift the pump before you check the transport equipment.
7. Be sure you have a by-pass line
8. Use helmet, eye glasses and protective shoes for your safety
9. Place a protective barrier around the pump within the necessary safety area
10. Dust, liquids and gaseous that may cause overheating, short circuit, corrosion and fire must be kept away from the pump unit.
11. By checking the noise level of the pump unit, necessary measures to avoid noisy operation of the pump that can have harmful effects on the personnel and environment.
12. Be careful about the direction of transport and storage.
13. Cover appropriately the moving parts to avoid possible injury of the personnel. Mount the coupling guard and belting before starting-up the pump
14. All the electrical and electronic applications must be performed by authorized person conforming EN60204-1 and /or domestic instructions.
15. Protect the electrical equipment and motor against overloading
16. If flammable and explosive liquids are pumped, ground connection of electricity should be carried out properly
17. Do not expose the pump unit to sudden temperature variations
18. All personnel who work with the waste water system need to be vaccinated in case of contagious diseases.
19. If the pump contains hazardous liquids, one must use protective helmet against the risk of splatter. One also must accumulate the liquid in a proper container against any risk of leakage.

All other health and safety rules, laws and regulations must be applied.

2. GENERAL

2.1. Definition of Pump and Usage Areas

- Water networks and pressurization facilities
- Irrigation, sprinkling and drainage systems
- Filling-Draining of tanks and reservoirs
- Hot and cold-water circulation in heating and cooling systems
- Condense water pumping
- Water circulations in pools
- Health and purification facilities
- Industrial and social facilities
- Fresh and sea water pumping in ships

They shall be used to pressurize liquids (up to 90°C) which are clean or mildly impure, non abrasive, and not containing large solid particles or fiber.

CAUTION

Please contact MASDAF MAKINA SANAYI A.Ş. for liquids that have different chemical and physical specifications.

The pumps comply with DIN 24255 standards within nominal capacity range.

Product Information as per Regulation No. 547/2012 (for Water Pumps with a Maximum Shaft Power of 150 kW) Implementing "Ecodesign" Directive 2009/125/EC

Minimum Efficiency Index for MAS INM Pump Series is shown on the pump label.

MEI values of MAS INM Pump Series are shown on the pump characteristic curves.

Minimum Efficiency Index for MAS INM Pump Series; Minimum 0.4. (MEI≥0,4)

Efficiency values of the pump characteristic curves, which are cut diameter, are expressed in %.

INM Series water pumps, the pump efficiency can be achieved more than fix speed in case of variable speed control.

More information about the Ecodesign can be reached at www.europump.org

2.2. Performance Information

Actual performance of the pump can be obtained from the order page and/or from the test report. This information is given on the pump label.
The performance curves given in the catalog are valid for water whose density and viscosity are p=1 kg/dm3 and p=1 cst. respectively. For those liquids whose densities and viscosities are different from those of water, please consult with MASDAF **MAKINA SANAYI A.Ş.** since the performance curves vary with density and viscosity.

CAUTION

Do not operate the pump with a motor that has a different power except for the given catalog and label values.

The pump is not to be operated at off-design point given in the order and supplied from the firm.
It is necessary to ensure that the instructions are obeyed for the safe running of the pump.

2.3. Warranty Conditions

The entire products in our selling program are warranted by **MASDAF MAKINA SANAYİ A.Ş.**

The warranty conditions will only be valid when all the instructions about installation and start-up operations of the pump unit are taken into account.

2.4. Test

Pump performance values are valid under our factory test conditions.

2.5. Pressure Limit

Pressure at the discharge flange must not exceed 16 Bar. A special order is necessary for applications with higher pressures.

3. SAFE OPERATING CONDITIONS

This manual contains main safety instructions for the installation, operation and maintenance. It must be read by the personnel who are responsible for installation and operation. This manual should always be kept near the installation location. It is important to comply with safety precautions stated in page 1 along with the general safety instructions as well as preventive measures repeated in other sections of this manual.

3.1. Training of Personnel

Installation, operation and maintenance personnel must have necessary knowledge in order to accomplish the given job. The responsibility, adequacies and controlling duties of such personnel must be determined by the costumer. It has to be certain that these personnel comprehend totally the content of the operating manual.
If the personnel do not have enough knowledge, required training must be given by the costumer. If training support is needed by the costumer, it will be provided by the manufacturer/seller.

CAUTION

Untrained personnel and unwillingness to comply with safety instructions may be risky for both machine and environment. **MASDAF MAKINA SANAYI A.Ş.** is not responsible for this kind of damages.

3.2. Hazardous Conditions That May Occur When One does not Comply With the Safety Instructions

Incompliance with safety regulations may put the personnel, the environment and the machine in danger and thus may cause damages. Incompliance with safety regulations may give rise to situations listed below.

Important operational functions of the factory may stop.
Maintenance may get difficult.
One may get injured by electrical, mechanical or chemical hazards.

3.3. Safety Measures for Operator

Dangerous, hot or cold components in the pump area must be covered so that one cannot touch them. Moving components of the pump (such as coupling) must be covered so that one cannot touch them. Those covers must not be dismounted while the pump is running. Dangers that results from electrical connections must be removed. To get more information about this subject, you can refer to domestic electrical instructions.

3.4. Safety Measures for Maintenance and Installation

The costumer must assure that all maintenance, check and installment tasks are performed by qualified personnel. Repair work must only be performed while the machine is not running.
The pump and its auxiliary system must be cleaned thoroughly if it contains hazardous liquids. At the end of the repair work, all safety and protective equipment must be re-installed.

3.5. Spare Parts Replacement

Replacement of spare parts and all modifications must be done after contacting with the manufacturer. Spare parts and accessories certified by the manufacturer are important for the safe operation of the system.

Notice: MASDAF MAKINA SANAYI A.Ş. is not responsible from the usage of improper spare parts.

4. TECHNICAL INFORMATION

4.1. Design

Single stage, non-self priming in-line centrifugal pumps are furnished with standard pumps and mechanical sealings.

4.1.1. Locations of Flange, Flanges

Discharge Flanges :	DIN 2533-PN 10/16
Suction Flanges:	DIN 2533-PN 10/16

4.1.2. Connection of Pump and Motor

Motor is close coupled to the pump with a rigid coupling using and an adapter and flange. In this way, the shafts of the motor and pump constitute a complete unit.

4.1.3. Impeller

The closed radial type impeller of the pump is balanced dynamically in an electronic balance machine. The thrust (axial force) is balanced with the back wear ring and balance holes.

4.1.4. Shaft

The shaft, impeller and other parts of the pump is designed to be dismountable without moving (dislodge) the suction and discharge pipes and volute of the pump. In this way, the installation and maintenance operations can be performed very easily.

4.1.5. Bearing and Lubrication

Rolling bearings are not used in INM, INM Duo, INM GenIO type pumps. Motor bearing is enough for countervailing all axial and radial forces. In CSV series pumps, 63... C3 type 2 ball bearings are used.

In our standard production, pumps with oil-lubricated bearings are shipped without oil inside. Before starting the pump, the oil level must be checked from the oil indicator. If the oil level cannot be seen from the indicator, add oil from the filling plug on the bearing housing. It should be ensured that the oil used is high quality, has a high operating temperature range and high oxidation resistance. For example, Shell Tellus T46 or equivalent oil is recommended.

In grease-lubricated pumps, a small amount of grease should be pressed from the plug on the bearing covers before the first start-up so that the grease does not reach to the point of leakage. Pressing too much grease will cause an increase in the bearing temperature. It should be ensured that the grease used is high quality, has a high operating temperature range and high oxidation resistance. For example, Shell Alvania RT3, Castrol Pyroplex Blue NLGI2 or equivalent grease is recommended.

4.1.6. Seals

In standard production, various mechanical seal types (e.g. bellow type, spring actuated type) are used for sealing.

4.2. Construction of Pump Group

4.2.1. Drive

TEFC (Totally Enclosed Fan Cooled) 3 phase, squirrel caged, in accordance to DIN 42673 electrical motor which complies with DIN IEC and VDE is used to drive the pump in proper speed and power.

Specifications of electrical motor;

Isolation class	: F
Protection class	: IP 54-IP 55
Frequency	: 50 Hz
Running type	: S1
Start up type	: Up to 4 kW, 3x380 V (Y) More than 4 kW 3x380V (Δ) + (Y/ Δ)

4.2.2. Coupling and Coupling Guard

Pump can only be run with a couplingguard in accordance with EN 953 according to safety instructions. If there is no coupling cover, it is provided by the operator.

5. TRANSPORT AND STORAGE

Suction, discharge and all auxiliary fittings must be closed during transport and storage. Dead-end covers must be removed while the pump unit is being installed.

5.1. Transport

Pump and pump group must be carried safely to the installation location by lifting equipments.

CAUTION

Current general lifting safety instructions must be applied. Please use a suspension system shown in figure while you are carrying and lifting the pump unit. The suspension rings may be broken because of the excessive load and may result in a damage of the pump. Prefer fabric cable for suspension.

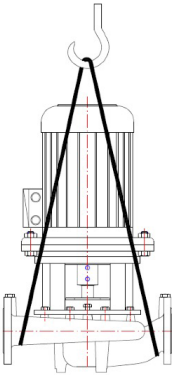

Figure 1: Transport of Pump Group

Incorrect lifting may damage the pump unit and cause injuries.

Damages caused in transport

Check the pump when it is delivered to you. Please let us know of there is any damage.

5.2. Storage

Please keep the unit clean, dry and closed area during storage

If the pump is out of use for a long time, please consider the instructions below.

1. If there is water inside the pump, drain it.
2. Clean the pump casing and impeller by jetting clean water for a short time.
3. Empty water inside the pump casing, suction line and discharge line.
4. Add small amount of antifreeze inside the pump casing if it is not possible to empty it completely. Rotate the pump shaft by hand to mix the antifreeze.
5. Close the suction and discharge exits with gasket
6. Spray an anti-corrosive into the pump casing.
7. Rotate the pump shaft by hand once in every month, in order to protect it from freezing and to lubricate the bearings.

6. ASSEMBLY / INSTALLATION

6.1. Location of Installation

Pump shall be installed in a location where the control and the maintenance of the pump are easily made. The pump room shall be suitable for operation of lifting systems such as freight elevator, forklift, etc.

The pump group should be installed in the lowest possible location of the pumping system in order to achieve the highest suction pressure.

6.1.1. Location of Installation- Local Ambient Temperature

When the local ambient room temperature exceeds +40oC in a pumping system, suitable ventilation should be provided in order to remove the heat dissipated to the environment and supply fresh air.

6.2. Piping

6.2.1. General

- Do not use the pump as the hinged support for the piping system.
- Put enough supports under the piping system in order to carry the weight of the pipe and fittings.
- Avoid piping system loads on pump by installing flexible components (compensator) to suction and discharge of the pump.

- By mounting flexible supporting items, take into consideration the fact that these items may elongate under the pressure.
- Suction pipe shall be in a constantly increasing slope to the pump. Air in the suction pipe shall be arranged to move into the pump
- Discharge piping shall be in a constantly increasing slope to the reservoir or discharge point, without up and downs which can cause air pockets in the piping system. At locations where forming of air pockets is possible, special items like air valve and air cock are mounted to evacuate the trapped air.
- It is important that pipe diameter and fittings are at least as much as the pump opening diameter or preferable one or two size higher. One should never use fittings with smaller diameters than the pump exit diameter. In particular, preferred fittings like foot valve, strainer, filter, check valves and valves shall have large free passing area, and low friction loss coefficient.
- For piping systems with hot liquids, thermal expansions are to be taken into account and compensators shall be mounted in accordance with these expansions. Caution shall be exercised to avoid the loading of pump in this installation.

6.2.2. Specification of Work in Piping Installation

In installation of pipes, follow the procedures below certainly.

- Install the pump on the concrete base.
- Take out the guards (placed by the manufacturer) from suction and discharge openings of the pump.
- Close the suction and discharge flanges with rubber gaskets. This precaution is important to avoid the undesired substances (weld crust, weld slag, sand, stone, wood piece etc.) get into the pump. Do not take off this gasket until the installation is completed.
- Start the installation of piping from the pump side. Do the necessary assembling and welding of the parts in a successive order.
- In these operations, do not neglect to put the necessary supports in their respected locations.
- Following above procedure, complete all piping system at suction side up to the suction tank (or foot valve if available), at discharge side up to do discharge collector and discharge pipe.
- When all installation and welding process is done and the heat dissipated by welding is removed, dismantle all the bolted connections from the suction tank to discharge pipe. Take out all demountable parts.
- Clean these parts and then paint body coat completely inside and outside.
- Mount the parts again in their intended places. However, this time start from the discharge line and move downward to the pump. In this instance, do not forget to check the flange gaskets. If needed, (for example deformation during welding) replace them.
- Concerning the connection of the pump flanges to piping, in case of misalignment of axis and flange holes, do not force the system to eliminate the misalignment. Forcing the system may cause difficult-to-correct problems.
- If there is an axial misalignment between the flanges of the pump and the pipe, due to the welding or any other reasons, cut the pipe from a suitable location in order to fix the problem. Connect the pipe (pump side) to the pump. After carrying out the necessary correction, connect the parts again by welding..
- Dismantle and clean the last welded part. Repaint again and mount on its place.
- After all these processes are accomplished, remove the rubber gasket from the suction and discharge openings. Open their holes and mount them again on their intended place.

6.2.3. Specification of Work after Installation of Piping and Piping System

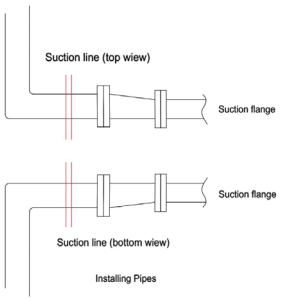

Figure 2: Piping System

An illustrative piping system is shown in Figure 4. Appropriate manometers shall be mounted on suction and discharge pipe lines.

Complete the auxiliary pipe connections in piping system if exist (cooling to bearing housing, and stuffing box (seal), relief pipe, oil pipe etc.)

6.3. Motor Connection

Motor shall be connected by an electrical technician according to the connection (switch) diagram. Local electricity policies regulations have to be applied.

- Electrical connections have to be made by authorized electricians.
- In dismantling the pump, make sure the electricity is cut off before taking the motor cover out.
- Use the appropriate electrical connection to the motor.

6.3.1. Motor Connection Diagram

Motors requiring high moments at start up shall not be connected star-delta

Frequency controlled motors, require high moment at start up and have to be cooled properly at low speeds. Provide the necessary cooling for the motors.

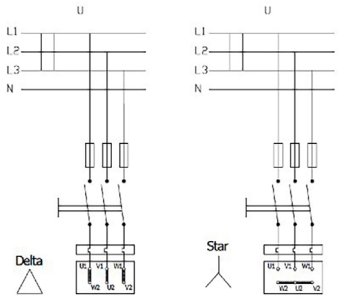

Figure 3: Electric Connection Diagram

Electrical Circuit	Motor	
U (Volt)	230/400 V	400 V
3 x 230 V	Delta	
3 x 400 V	Star	Delta

6.3.2. Motor Protection

- Three phased-motor shall be connected to power supply.
- Wait the motor to cool down when thermic protected motor breaks in circuit due to the overheating. Make sure the motor does not start automatically until it cools completely
- In order to protect the motor from overcharging and short circuit use a thermic or thermic-magnetic relay. Adjust this relay to the nominal current of the motor.

Electrical equipments, terminals and the components of the control systems may carry electric current even though they are not operating. They may cause deadly and serious injuries or irreparable material damages.

7. COMMISSIONING, START UP AND OPERATING

7.1. Preparations Before Start Up

- Check pump seals
- Make sure that the pump and the suction pipe is completely filled with water before the starting. If the pump operates on a positive suction head, no problem will be encountered. Suction valve is opened and air drains are un-tightened.
- Pumps with foot valve are filled with water by opening the pump filling tap or, one takes advantage of the water accumulated in the discharge pipe and by using a small valve the check valve is bypassed and the pump is filled.
- In vacuum pump driven pumps, by operating the vacuum pump one achieves to fill the pump via increasing the water level in the suction pipe.
- Check that the pump shaft rotates easily by hand.

CAUTION

Do not start your pump dry (WITHOUT WATER).

7.2. Checking The Direction of Rotation

CAUTION

- The direction of rotation is indicated on the pump label with an arrow. Apart from special cases, it is clockwise direction when looking from the motor end. Observe if the pump is rotating in the expected sense by starting the motor for a very short instant. If it is turning in the opposite sense, interchange any of two motor leads.
- If the motor connection is delta, open the discharge valve slowly.
- If the motor connection is star-delta, set the time relay to maximum 10 seconds. Monitor the passage from star to delta by pressing the start button. As soon as you are assured that the connection is delta, open the discharge valve slowly. Continue opening the valve until you read the amperage on the electrical panel
- **One should always check the labels which show the direction of rotation and the direction of fluid flow. If you dismount the coupling protection to monitor the direction of rotation, do not restart the engine before remounting the protection.**

As a result of getting in touch with rotating and stable parts each other temperature increase can occur. Never check the direction of rotation while the pump is dry.

7.3. Start up Procedure

- Check if the suction valve is open and the discharge valve is closed. Start the motor
- Wait until the motor reaches sufficient speed. (In Star-delta connections, wait until the engine passes to delta connection.)
- Keeping an eye on the amperage shown on the panel, open the discharge valve slowly.
- In the primary operation, if the discharge pipe is empty, do not open the valve completely. By keeping an eye on the amperage, open the valve with care regarding that it should not exceed the value indicated on pump's label.
- After opening the valve completely, check the pressure from the pump exit manometer and make sure that this value is the pump operating pressure value and is indicated on pump's label.
- If the value one reads is less than the pump label value when the valve is completely open, it means that the height is miscalculated. Increase the value by narrowing the valve and bring it to pump's label value.
- If the value one reads is greater than the pump label value when the valve is completely open, it means that the height is calculated less than what it should be in reality. The device is pumping less than what is requested. Check the installation and the calculations.

- Minimum flow rate: If the pump is working with zero flow rates (closed valve) from time to time during its operation, the water inside the pump may endanger the pump by getting warmed up. In such cases, a minimum flow valve must be connected to the pump exit.

CAUTION

Stop the motor if the pump gets too hot. Wait until it gets cold. Then start the system up again carefully.

7.4. Shut Down Procedure

CAUTION

During sudden startups and stops, a pressure reducing valve must be placed at the exit section of high flow rate pumps whose discharge pipelines are long, in order to reduce water hammer effect. Water hammer may explode the pump.
In normal conditions (apart from sudden power shut down, etc), stop the pump as below:

- Close the discharge valve slowly
- Switch the power off, stop the motor. Notice that the rotor slows down.
- Do not start up the motor at least before 1 to 2 minutes.
- If the pump will be out of use for a long time, close the suction valve and auxiliary circuits. If the pump is outside and if there exists a danger of frost, remove all drain taps and empty all the water inside the pump. (5.2. Storage)

CAUTION

If the pump is outside and if there exists a danger of frost, remove all drain taps and empty all the water inside the pump.

8. MAINTENANCE

CAUTION

Maintenance operations must be done by authorized personnel with protective clothing only. The personnel must also beware of high temperatures and harmful and/or caustic liquids. Make sure that the personnel read carefully the manual.

- The instructions in Safety Precautions must be executed during maintenance and repair
- Continuous monitoring and maintenance will increase the engine's and pump' s lives.

The instructions below should be applied.

8.1. The Checks During the Operation

- Pump must never be operated without water.
- Pump must not be operated for a long time with the discharge valve closed (zero capacity).
- Precautions must be taken against flare up when the component temperatures are over 60°C. "Hot Surface" warnings must be placed over necessary areas.
- All the auxiliary systems must be in use while the pump is operating.
- If the pump has mechanical sealing, there is no need for excessive maintenance. Water leakage from the mechanical sealing indicates the fact that the sealing is worn out and therefore needs to be replaced.
- If the system consists of a substitute pump, keep it ready by operating it once a week. Check also the auxiliary systems of the substitute pump.

Occuring explosive ambient inside of the pump must be prevent. The air of the pump and suction line must be drained before commissioning of the pump. The interior of the pump contacting with pumped liquid including gasket way and auxiliary systems must be filled with pumped liquid.

- Ensure that delivery pressure is enough.
- Exceeded the allowable using limits regarding pressure, temperature, transportating material and motor speed may cause explosion risk, hot and poison liquid may leak to external environment.
- In oil and grease lubricated pumps, be sure to comply with the oil addition or change periods. Oil addition or change periods should be determined by the managements since they will vary depending on the operating conditions and operating times of the pumps in the plants. Never mix different types of oils.

Recommended oil change periods:	
Speed (rpm)	Change Period
3000	1500 working hours
1500	2500 working hours
1000	4000 working hours

8.1.1. Component Check

CAUTION

To make possible the visual control, one must be able to reach the pump from any direction. Especially, to be able to dismount the internal units of the pump and the engine, sufficient free space must be created around them for maintenance and repair. Furthermore, one must make sure that the piping system can easily be dismounted.

8.1.2. Bearing and Lubrication

Rolling bearings are not used in INM, INM Duo, INM GenIO type pumps. Motor bearing is enough for countervailing all axial and radial forces. In CSV series pumps, 63... C3 type 2 ball bearings are used.

8.1.3. Mechanical Seal

Mechanical seals are used in inline type pumps. Mechanical Seals are absolutely leak-proof and needs less maintenance than soft packing.

Mechanical seal;

1. **Provides leak proof operation in heavy operating conditions (in waste water pumps, chemical process and refinery pumps).**
2. **Easily mountable and needs less maintenance.**
3. **Does not cause wearing on the shaft**
4. **Sealing operation does not depend on the quality of shaft finishing.**

8.1.4. Drive

Apply to the operating instructions of the motor manufacturer.

8.1.5. Auxiliary Components

Check regularly the fittings and the gaskets, replace the worn out pieces.

8.2. Service

Our After Sales Services Department provides service support. Manager should employ authorized and trained personnel for mounting/ dismounting procedures. Before these procedures, one must make sure that pump interior is clean and empty.

This criterion is also valid for the pumps which are sent to our factory or to our service points.

Maintain the safety of the personnel and the environment in every field procedure.

8.3. Spare Parts

The spare parts of pumps are guaranteed for 10 years by **MASDAF MAKINA SANAYI A.Ş.**

In your spare parts requests, please indicate the below listed values that are indicated on your pump's label.

Pump type and size:
Motor power and speed:
Pump serial number:
Capacity and head:

If you wish to keep spare parts in store, depending on the number of same type of pumps, for two operation years, the quantities which are listed in the table below are recommended.

Component Name	The Number of Equivalent Pumps in the Installation						
	1-2	3	4	5	6-7	8-9	10+
Shaft (Key included) (quantity)	1	1	2	2	2	3	%30
Impeller (quantity)	1	1	1	2	2	3	%30
Mechanical Seal	1	2	2	3	3	4	%50
Wear ring	1	1	1	2	2	3	%50
Rigid clamped coupling (INL)	1	2	2	3	3	4	%50

Table 1: Spare Part List

9. NOISE LEVEL AND VIBRATION

The reasons which increase the noise level are indicated below:

- Touch of coupling halves due to worn rubber sleeves (incorrectly aligned)
- Noise level increases due to the fact that the pump is not founded properly (Vibration)
- If the installation does not have compensator noise and vibration increases.
- Wearing in ball bearing also increases noise level.

Check if there is any noise increasing elements in your installation.

9.1. Expected Noise Values

Measurement conditions:

- The distance between the measure point and the pump: 1m
- Operation : Without Cavitation
- Motor : IEC Standard Motor
- Tolerance : ±3 dB

Power of Motor PN (kW)	Sound Pressure Level (dB) * Pump with Motor	
	1450 d/d	2900 d/d
< 0,55	63	64
0,75	63	67
1,1	65	67
1,5	66	70
2,2	68	71
3	70	74
4	71	75
5,5	72	83
7,5	73	83
11	74	84
15	75	85
18,5	76	85
22	77	85
30	80	93
37	80	93
45	80	93
55	82	95
75	83	95
90	85	95

Table 2: Sound Pressure Level

(*) Without protective sound hood, measured at a distance of 1 m directly above the driven pump, in a free space above a sound reflecting surface.

The above values are maximum values. The surface noise pressure level at dB(A) unit is shown as (LpA). This complies with EN ISO 20361.

10. DISASSEMBLY, REPAIR AND REASSEMBLY

Before starting work on the pump set, make sure it is disconnected from the mains and can not be switched on accidentally.

Fallow the safety precautions outlined in "Safety instructions".

10.1. Disassembly

- Close all valves in the suctions and discharge lines. Drain the water in the pump.
- Remove the safety guard.
- Because of the pump design, the impeller, shaft and other rotating parts being removable no need to disconnect the suction and delivery pipes. If there is not any operation on the casing, not need to remove the pipe connection.
- If to take out the complete pump is necessary, disconnect pump from the driver, suction and discharge pipes and detach the baseplate (if any)
- Remove stud nuts which connect the adapter to the casing and dismantle the rotor group with motor from the volute casing.
- Unscrew the end nuts of the impeller and take out the impeller and impeller key. Use rust remover solvent if necessary during dismantling.
- Take out the set screws on the pump shaft and take off the motor by unscrew the hex bolts.
- Pull out the rotating part of the mechanical seal from the shaft.
- Take out the shaft.

10.2. Reassembly

- Reassembly proceeds in reverse sequence to disassembly as described in section 10.1. You may find the attached drawings useful.
- Coat the seats and screw connections with graphite, silicon or similar slippery substance before reassembly. If you can not find any of the above you may use oil instead. Except the pumps for drinking water.
- Never use the old o-rings and make sure the o-rings are the same size as the old ones.
- Connect the pump shaft to the motor, fix the setscrews.
- Place the stationary part of mechanical seal to its place on the adaptör.
- Mount the adaptor to the motor flange.
- Slip the rotating part of the mechanical seal onto the pump shaft.
- Place the impeller key into keyway, slide the impeller onto the shaft and screw the impeller nuts.
- Now reassembly of the rotor group is complated.
- Finally mount rotor assembly to the volute casing (In the repair shop or on site).
- Make sure the gaskets and o-rings are evenly placed without sliding and not damaged or not squezed at all.
- Place the pump on the baseplate, couple the motor. Connect suction and discharge pipes as well as auxiliary pipes. Take the unit into operation as it was indicated in section 7.

11. INFORMATION ABOUT FREQUENCY INVERTER

11.1. Installation Of The Frequency Inverter On The Motor

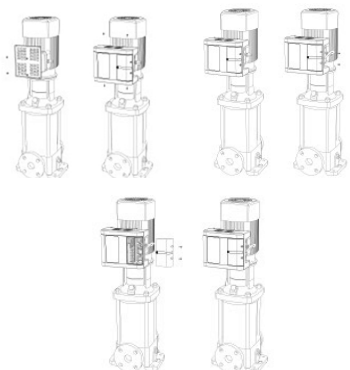

First open the pump motor junction box, fix the connection terminal between the power line and the water pump, and then fix the bottom plate on the motor junction box, consider the frequency converter is centered, and the bottom plate should be adjusted reasonably.
Fix the machine on the bottom plate, remove the wiring surface shell on the right side of the machine, so that the pump output line, the input line of the frequency converter and the sensor line pass through the waterproof joint successively, and fix it according to the mark.
The main terminal of the machine is R/S/T is the input end of the power supply, U/V/W is the output end of the motor, pay attention to the wiring, to prevent the wrong connection resulting in the explosion of the machine.

11.2. Wiring Diagram

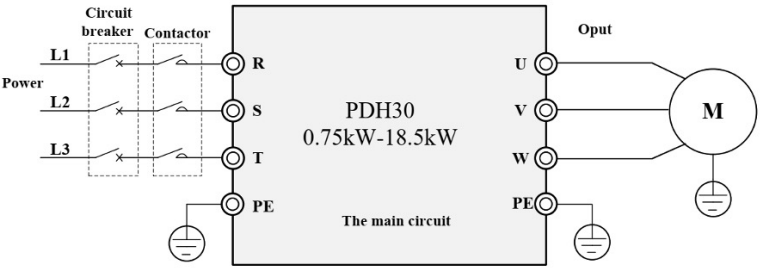

Terminal Mark	Name	Instructions
R, S, T	Three-phase power input terminal	Three - phase AC power input connection terminal
U, V, W	Inverter output terminal	Connection of three-phase motor
PE	Earthing terminal	Connect the earth terminal

11.3. Control Loop Terminals and Functions

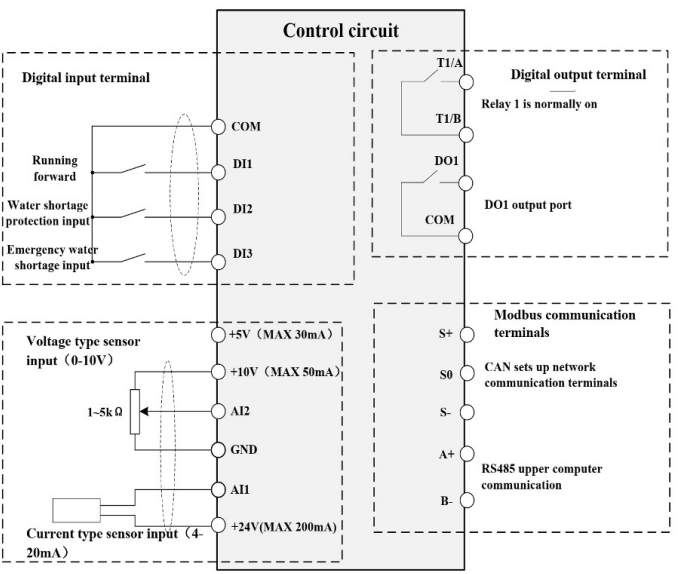

Control Terminal Instruction

TERMINAL SYMBOL	TERMINAL NAME	TECHNİCAL SPECİFİCATİON
DI1~DI3	Multi-function digital input terminal	1. Optical couplers isolation one-way input. 2. Enabled when connected to GND. Disabled when open. 3. Input voltage range: 9~36 VDC.
AI1	Analog input terminal 1	1. Input voltage range: DC 0~10VDC or 0/4~20mA, determined by parameters. 2.Input impedance: 22KΩ when voltage input; 500Ω when current input.
AI2	Analog input terminal 2	
5V	Analog reference voltage.	5V, ±5% maximum output current 30mA
10V	Analog reference voltage.	10V, ±5% maximum output current 50mA
GND	Analog ground terminal.	5V and 10V reference zero potential.
T1A/T1B	Relay RO1 output.	T1A~T1B: normally open terminals Contact capacity: AC 250V / 3A / normally open terminals.
24V	24V power for external devices.	Provide +24V power to external devices. Maximum output current 100 mA. Commonly used as digital input working power and external sensor power.
COM	24V power public terminal.	Provide 24V power public terminal to external devices.
A+	Standard RS485 communication terminal.	Standard isolated485 communication interface. Please use twisted pair or shielded wire. Can be used for PC communication control.
B-		
S+	CAN communication terminal.	Standard CAN communication interface. Please use twisted pair or shielded wire. Can be used for inverter on-line.
S-		
S0		

11.4. Operation Panel Diagram

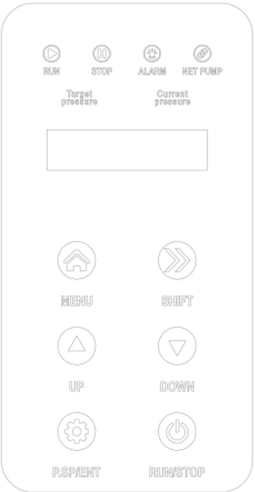

(1) MENU: used to switch from fixed model to modification model.

(2) P.SP/ENT: shortcut key of water pressure setting and "confirmation" key of parameter setting.

(3) SHIFT: used to shift display and move cursors in parameter modification .In running status, pressing "shift" can switch back and forth among running frequency, output current, pressure setting and feedback pressure. Press "shift" to modify parameters. Flicker bit is the current bit which can be modified.

(4) ▲▼ keys: used to modify parameter values.

(5) RUN: start button when using keyboard as starting mode.

(6) STOP: stop button and fault reset button when using keyboard as start mode.

Indicator Light Instruction

(1) Run: (Always on) Running instruction; (Flicker): Sleep or stop instruction

(2) Stop: Stop or standby instruction

(3) Alarm: Inverter protection alarm.

(4) Net Pump: Online instruction: When the light is on, the communication is successful.

(5) Target pressure: When the display shows "target pressure" and "current pressure", it lights up when the pressure is adjusted;

(6) Current pressure: When the display is "target pressure" and "current pressure" light up;

11.5. Sensor Connections

The VFD can be connected to remote pressure gauge and pressure transmitter. Please connect wire according to below diagrams.

11.5.1. Remote pressure gauge: Working voltage 4~13VDC, output 0~10VDC. Wiring method is shown as below, Signal input connection AI2;

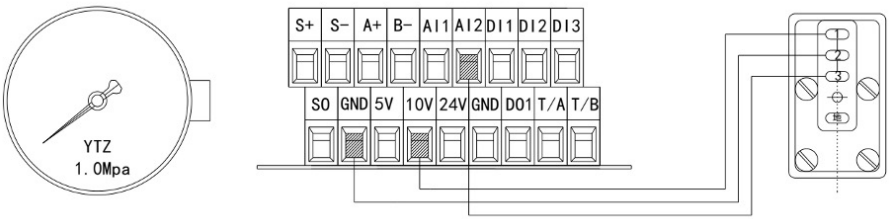

11.5.2. 24V pressure transmitter: Working voltage range 10~30VDC, output 4~20mA, Signal input connection AI1.

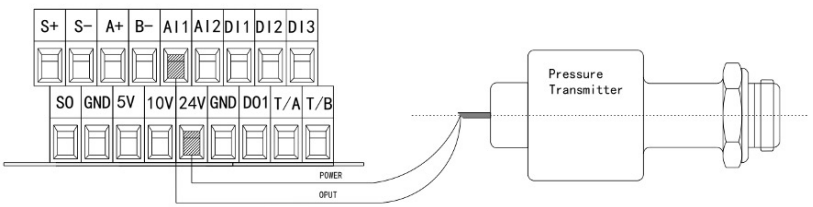

11.6. Quick Setting

Please follow the steps below to finish setting

Step 1: Set the sensor range, the sensor type

F0.08 = 16.0 Sensor's range

F0.09 = 2 Sensor feedback channel selection (0: AI1 channel 1: AI2 channel; 2: Max (AI1, AI2))

F2.00= 0 AI1 Sensor type (0:4-20mA; 1:0-10V; 2:0.5-4.5V)

Step2: Confirm the motor's rotation direction

Run the pump shortly, monitor if the direction is correct. Change the rotation direction by 2 ways below:

① Disconnect the input power and make sure the display is OFF, then exchange two lines of any of U\V\W.

② Stop the VFD, Modify to F0.02.

Step 3: Adjust the display pressure

There is two ways to adjust the display pressure and actual pressure:

① When the pressure is stable, adjust F2.01 or F2.03 within each range of 0.010.

② If the VFD pressure is a little higher, make the sensor range lower(F0.08); If the VFD pressure is a little lower, make the sensor range higher (F0.08).

Step4: Macro Settings

Please refer to the table below, to set the system quickly.

SYSTEM TYPE	PARAMETER	DETAILS OF PARAMETERS CHANGED AUTOMATİCALLY	DESCRIPTION
Solo Pump setting	F0.20=1	F0.06=1; F1.02=0; F1.03=0; F2.05=8; F8.00=1	Auto-Reset, Auto- Start enable,
Two VFDs, as	F0.20=2	F0.06=1; F1.02=1; F1.03=1; F2.05=8; F8.00=1	Auto-Reset, Auto- Start enable, an auxiliary drives can be controlled.
Three VFDs, as Host drives	F0.20=3	F0.06=1; F1.02=1; F1.03 = 2; F2.07=8; F8.00=1	Auto-Reset, Auto- Start enable, two auxiliary drives can be controlled.
Four VFDs , as Host drives	F0.20=4	F0.06=1; F1.02=1; F1.03=3; F2.05=8; F8.00=1	Auto-Reset, Auto- Start enable, three auxiliary drives can be controlled.
Five VFDs , as Host drives	F0.20=5	F0.06=1; F1.02=1; F1.03=4; F2.07=5; F8.00=1	Auto-Reset, Auto- Start enable, four auxiliary drives can be controlled.
Six VFDs, as	F0.20=6	F0.06=1; F1.02=1; F8.00=1 F1.03=5; F2.07=5	Auto-Reset, Auto- Start enable, five auxiliary drives can be controlled.
One VFD drive two pumps mode	F0.20=7	F0.20=7 F0.06=1; F1.02=0; F1.03=0; F2.05=8; F7.08=3; F7.09=4; F8.00=1;	Auto- Start; RO1 and RO2 through pressure output.

SYSTEM TYPE	PARAMETER	DETAILS OF PARAMETERS CHANGED AUTOMATİCALLY	DESCRIPTION
One VFD drive multiple pumps mode	F0.20=8	F0.05=1; F2.00=1; F2.0 5 =2; F2.12=1;	Terminal start up, Free stop, Turn off water pressure alarm.
Emergent Mode	F0.20=9	F2.05=1; F0.06=1; F8.00=1	Frequency source changed.
VFD network, Auxiliary No.1	F0.20=11	F0.05=2; F0.06=1; F1.00=1; F1.04=0; F2.05=9; F8.00=2	Auto- Start enable, The VFD communication address set to 1, Start up the standby host.
VFD network, Auxiliary No.2	F0.20=12	F0.05=2; F0.06=1; F1.00=2; F1.04=0; F2.05=9; F8.00=3	Auto- Start enable, The VFD communication address set to 2 , Start up the standby host.
VFD network, Auxiliary No.3	F0.20=13	F0.05=2; F0.06=1; F1.00=3; F1.04=0; F2.05=9; F8.00=4	Auto- Start enable, The VFD communication address set to 3 , Start up the standby host.
VFD network, Auxiliary No.4	F0.20=14	F0.05=2; F0.06=1; F1.00=4; F1.04=0; F2.05=9; F8.00=5	Auto- Start enable, The VFD communication address set to 4 , Start up the standby host.
VFD network, Auxiliary No.5	F0.20=15	F0.05=2; F0.06=1; F1.00=5; F1.04=0; F2.05=9; F8.00=6	Auto- Start enable, The VFD communication address set to 5 , Start up the standby host.

12. POSSIBLE FAILURES, CAUSES, SOLUTIONS

Possible failures and solution strategies are listed in the table below. Please apply to the Customers' Service Department of our company when a generic solution is not found to your problem.

While the failures are repaired the pump must always be dry and un-pressurized.

POSSIBLE FAILURE	CAUSES	SOLUTIONS
The pump delivers insufficient capacity.	· Discharge head too high. · Very high counter pressure. · Pump and/or pipe cannot discharge air, cannot suck. · Occurrence of air pockets inside the pipe. · NPSH is too low.	· Readjust the operating point. · See if there is any undesired material inside the pipe. · Vent completely the pump and the pipe. · Change the piping configuration. · Increase the liquid level.
Motor overload.	· System pressure is lower than the requested pressure level. · Speed too high. · Liquid pumped of different specific gravity and viscosity than that for which pump is rated. ·Engine works at two phases.	· Adjust the operating pressure to the label value. · Decrease the speed. · Increase the engine power. · Replace the fuse and control the electrical connections.
Pump head is too high.	· System pressure is higher than the requested pressure level.	· Set the operating pressure to the label value.
Bearing temperatures are high.	· Too much, too little or improper lubrication. · Increase in axial forcing.	· Change the oil, decrease or increase its quantity. · Clean the balance holes on the impeller disc.
Excessive leakage from the stuffing box.	· Worn out gland.	· Use brand new gland. · Change the stuffing bush.
Noisy operation.	· Worn out motor or pump ball bearings. · Cavitation. · Operation in the far left or right of the performance curve.	· Replace. · Close the delivery partially in order to reduce the capacity. · Operate the pump at its label setting.
Excessive increase in pump temperature.	· Pump and/or pipe can neither discharge, nor aspirate air. · Too low capacity.	· Bleed completely the pump and the pipe. · Open more the valve.
Vibration	· Pump and/or pipe can neither discharge, nor aspirate air. · NPSH is too low. · Internal components of the pump are worn out. · System pressure is lower than the requested pressure level. · Too much, too little or improper lubrication. · Rotor unbalanced. · Improper bearings.	· Bleed completely the pump and the pipe. · Increase the liquid level. · Replace the worn-out components. · Adjust the operating pressure to the label value. · In case of continuous overload, decrease the impeller diameter. · Change the oil, decrease or increase its quantity. · Balance the impeller again. · Use new bearings.

Table 3: Possible Failures, Causes, Solutions

13. TIGHTENING TORQUES

THREAD DIAMETER	TIGHTENING TORQUEMAX (Nm)	
	Property Classes	
	8.8	10.9
M4	3.0	4.4
M5	5.9	8.7
M6	10	15
M8	25	36
M10	49	72
M12	85	125
M14	135	200
M16	210	310
M18	300	430
M20	425	610
M22	580	820
M24	730	1050
M27	1100	1550
M30	1450	2100
M33	1970	2770
M36	2530	3560

Table 4: Tightening Torques Table

14. FORCES AND MOMENTS AT THE PUMP FLANGES

All of the applied load sif not reached the maximum allowable value, to provide that the following additional conditions, one of these loads may exceed the normal limit:

- Any component of a force or a moment, must be limited1.4times of the maximum allowable value,
- The actual force sand moments acting on each flange, should provide the following formula:

$$\left(\frac{\sum|F|\ \text{actual}}{\sum|F|\ \text{maximum allowable}}\right)^2 + \left(\frac{\sum|M|\ \text{actual}}{\sum|F|\ \text{maximum allowable}}\right)^2 \leq 2$$

In here, $\sum|F|$ and $\sum|M|$ arearithmetic sum of the loads for each flange at the pump level, without regard of the algebraic signs of the actual and maximum allowable values.

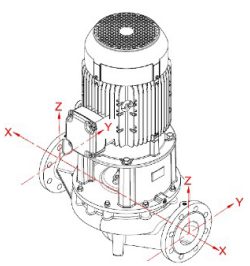

PUMP TYPE	FORCES AND MOMENTS						
	DN FLANGE	SUCTION AND DISCHARGE FLANGE			SUCTION AND DISCHARGE FLANGE		
	mm	N			Nm		
		Fy	Fz	Fx	My	Mz	Mx
40-125 40-1 60 40-200 40-250	40	595,3	476,2	523,82	428,58	500,01	619,06
50-125 50-160 50-200 50-250	50	785,7	642,9	714,3	476,2	547,63	666,68
65-125 65-160 65-200 65-250	65	1000	809,5	880,97	523,82	571,44	714,3
80-160 80-200 80-250 80-315	80	1191	976,2	1071,45	547,63	619,06	761,92
100-160 100-200 100-250 100-315	100	1595	1286	1428,6	595,25	690,49	833,35
125-200 125-250 125-315	125	1881	1524	1690,51	714,3	904,78	1000
150-200 150-250 150-315 150-360	150	2381	1929	2142,9	833,35	976,21	1190,5
200-315	200	3040,2	2440,5	2713,8	1065	1223,2	1612,4

Table 5: Forces and Moments at The Pump Flanges

Forces at the pump flanges were calculated according toTS EN ISO 5199 standard. The calculations are valid for the materials of cast iron and bronze. Forces and moments at the flanges that made of stainless material will be approximately twice as moments in the table.

15. SAMPLE PLUMBING

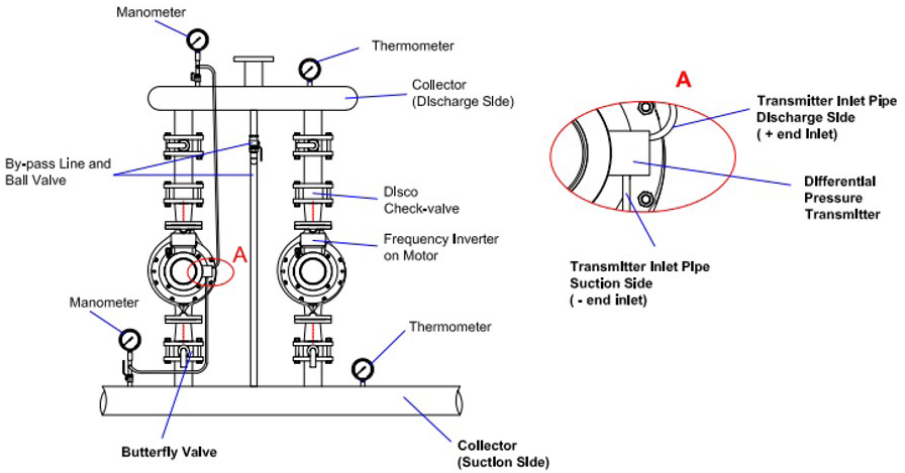

Figure 4: Sample Plumbing

16. SECTIONAL DRAWINGS AND PARTS LIST

INM Sectional Drawing and Part List (Without Coupling)

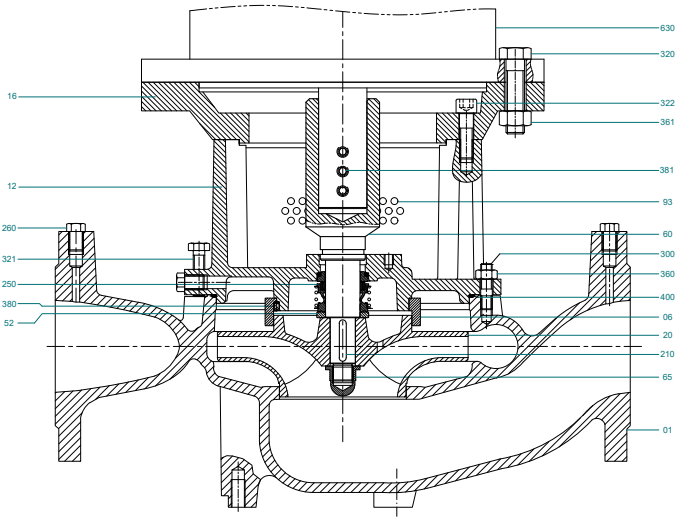

Figure 5: INM Sectional Drawing (Without coupling)

Part No	Part Name	Part No	Part Name
1	Pump Casing	260	Pipe Plug, Adapter
6	Wearing Ring	300	Stud, Pump Casing
12	Adapter	320	Hexagonal Bolt
16	Motor Flange	321	Hexagonal Bolt
20	Impeller	322	Hexagonal Bolt
52	Mechanical Seal Ring	360	Nut
60	Pump Shaft	361	Nut
65	Impeller Nut	380	Set-Screw
93	Protection Plate	381	Set-Screw
210	Key, Impeller	400	O-Ring
250	Mechanical Seal	630	Electric Motor

Table 6: INM Part List (Without Coupling)

INM Sectional Drawing and Parts List (With Coupling)

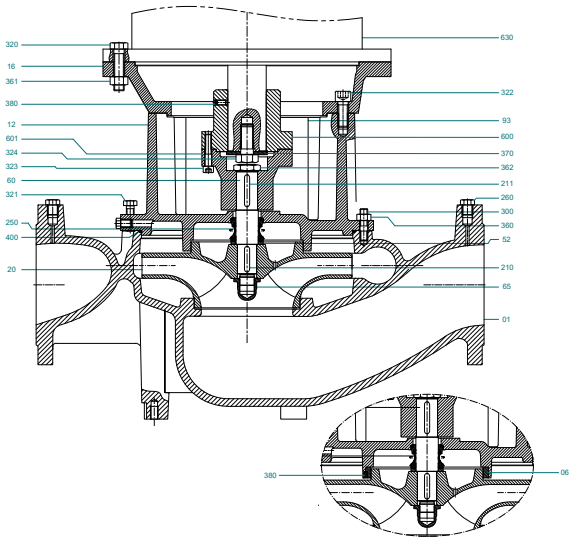

Figure 6: INM Sectional Drawing (With coupling)

Part No	Part Name	Part No	Part Name
1	Pump Casing	300	Stud, Pump Casing
6	Wearing Ring	320	Hexagonal Bolt
12	Adapter	321	Hexagonal Bolt
16	Motor Flange	322	Hexagonal Bolt
20	Impeller	360	Nut
52	Mechanical Seal Ring	361	Nut
60	Pump Shaft	380	Set-Screw
65	Impeller Nut	381	Set-Screw
93	Protection Plate	400	O-Ring
210	Key, Impeller	600	Coupling
250	Mechanical Seal	630	Electric Motor
260	Pipe Plug, Adapter		

Table 7: INM Sectional Part List (With Coupling)

CSV Sectional Drawing and Parts List

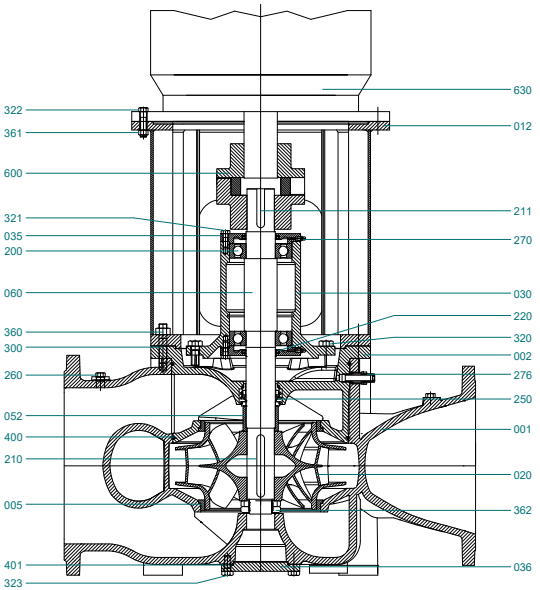

Figure 7: CSV Sectional Drawing

Part No	Part Name	Part No	Part Name	Part No	Part Name
1	Volute Casing	200	Bearing	321	Hex Bolt
2	Top Cover	210	Impeller Key	322	Hex Bolt
5	Wear Ring	211	Coupling Key	323	Hex Bolt
12	Adapter	220	Oil Seal	360	Nut (Casing)
20	Impeller	250	Mechanical Seal	361	Nut (Motor)
30	Bearing Housing	260	Solid Plug	362	Nut (Puller)
35	Bearing Cover	270	Greaser	400	O-Ring
36	Bottom Cover	276	Valve	401	O-Ring
52	Mech.Seals Front Bushing	300	Casing Stud	600	Coupling Kit
60	Shaft	320	Hex Bolt	630	Motor

Table 8: CSV Sectional Part List

17. EXPLODED VIEWS AND PART LIST

INM Exploded View and Part List (Without Coupling)

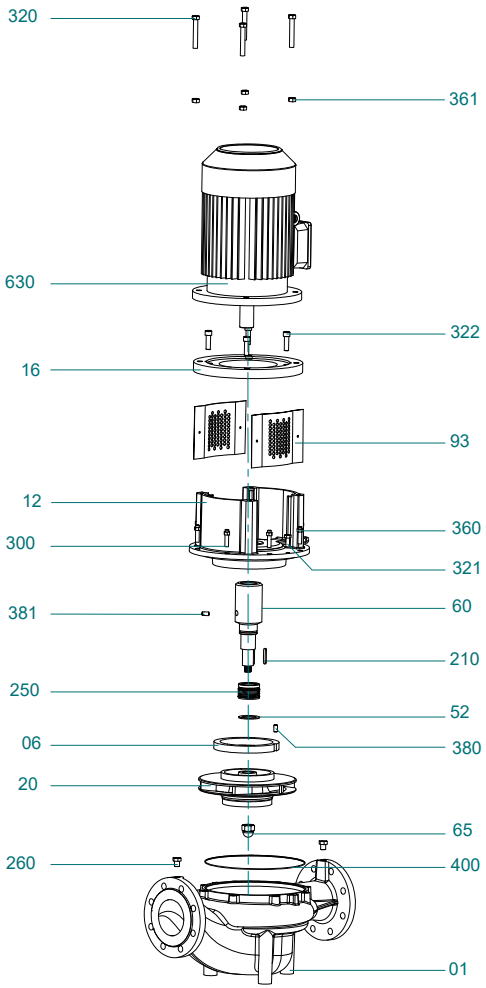

Figure 8: INM Exploded View (Without Coupling)

Part No	Part Name
1	Pump Casing
6	Wearing Ring
12	Adapter
16	Motor Flange
20	Impeller
52	Mechanical Seal Ring
60	Pump Shaft
65	Impeller Nut
93	Protection Plate
210	Key, Impeller
250	Mechanical Seal
260	Pipe Plug, Adapter
300	Stud, Pump Casing
320	Hexagonal Bolt
321	Hexagonal Bolt
322	Hexagonal Bolt
360	Nut
361	Nut
380	Set-Screw
381	Set-Screw
400	O-Ring
630	Electric Motor

Table 9: INM Exploded View Part List (Without Coupling)

INM Exploded View and Part List (With Coupling)

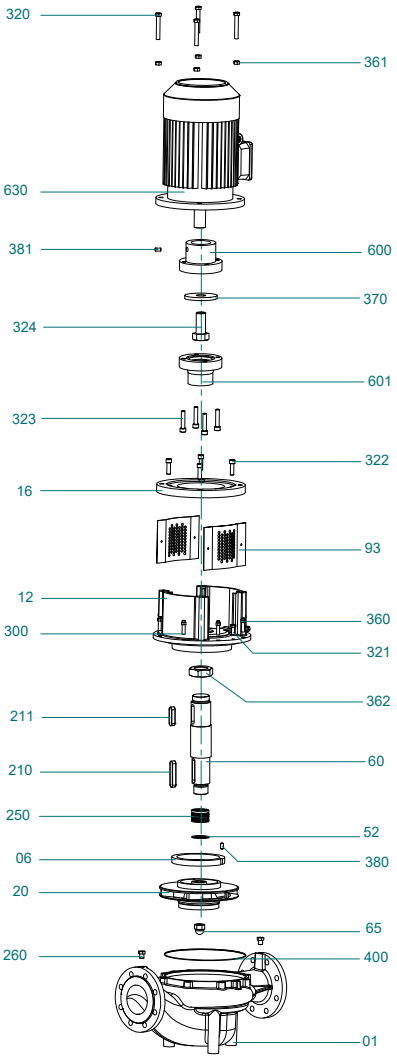

Figure 9: INM Exploded View (With Coupling)

Part No	Part Name
1	Pump Casing
6	Wearing Ring
12	Adapter
16	Motor Flange
20	Impeller
52	Mechanical Seal Ring
60	Pump Shaft
65	Impeller Nut
93	Protection Plate
210	Key, Impeller
250	Mechanical Seal
260	Pipe Plug, Adapter
300	Stud, Pump Casing
320	Hexagonal Bolt
321	Hexagonal Bolt
322	Hexagonal Bolt
360	Nut
361	Nut
380	Set-Screw
381	Set-Screw
400	O-Ring
600	Coupling
630	Electric Motor

Table 10: INM Exploded View Part List (With Coupling)

CSV Exploded View and Part List

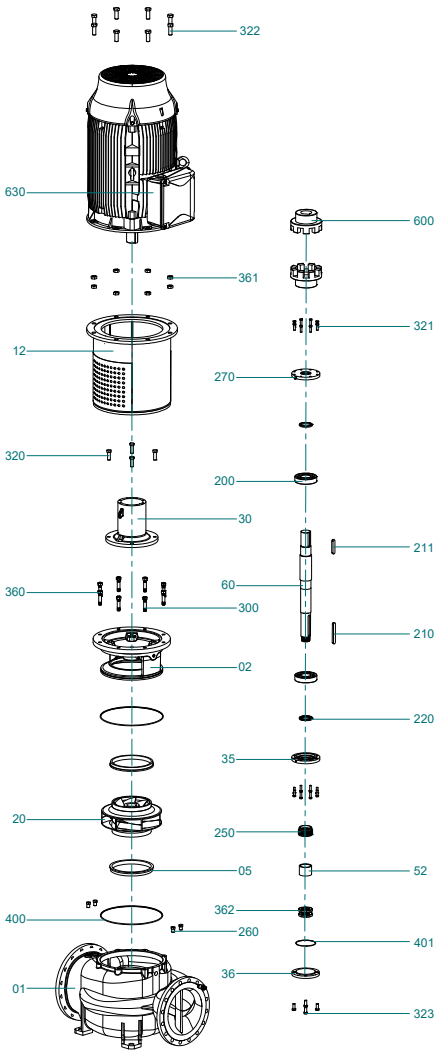

Figure 10: CSV Exploded View

Part No	Part Name
1	Volute Casing
2	Top Cover
5	Wear Ring
12	Adapter
20	Impeller
30	Bearing Housing
35	Bearing Cover
36	Bottom Cover
52	Mech.Seals Front Bushing
60	Shaft
200	Bearing
210	Impeller Key
211	Coupling Key
220	Oil Seal
250	Mechanical Seal
260	Solid Plug
270	Greaser
276	Valve
300	Casing Stud
320	Hex Bolt
321	Hex Bolt
322	Hex Bolt
323	Hex Bolt
360	Nut (Casing)
361	Nut (Motor)
362	Nut (Puller)
400	O-Ring
401	O-Ring
600	Coupling Kit
630	Motor

Table 11: CSV Exploded View Part List

18. MEI VALUE TABLE

Pump Type	Speed (rpm)	MEI
40-125	1450	0.4
40-160	1450	0.7
40-200	1450	0.7
40-250	1450	0.5
50-125	1450	0.4
50-160	1450	0.4
50-200	1450	0.6
50-250	1450	0.6
65-125	1450	0.4
65-160	1450	0.4
65-200	1450	0.5
65-250	1450	0.7
80-160	1450	0.6
80-200	1450	0.7
80-250	1450	0.7
80-315	1450	0.7
100-160	1450	0.5
100-200	1450	0.5
100-250	1450	0.6
100-315	1450	0.7
125-200	1450	0.5
125-250	1450	0.5
125-315	1450	0.5
150-200	1450	0.5
150-250	1450	0.5
150-315	1450	0.6
150-360	1450	0.4
200-315	1450	0.4

Table 12: MEI Table (1450 rpm)

Pump Type	Speed (rpm)	MEI
40-125	2900	0.5
40-160	2900	0.7
40-200	2900	0.5
40-250	2900	0.7
50-125	2900	0.4
50-160	2900	0.4
50-200	2900	0.4
50-250	2900	0.4
65-125	2900	0.5
65-160	2900	0.4
65-200	2900	0.4
65-250	2900	0.7
80-160	2900	0.5
80-200	2900	0.5
80-250	2900	0.5
100-160	2900	0.4
100-200	2900	0.5
125-200	2900	0.4

Table 13: MEI Table (2900 rpm)

NOTES

NOTES

NOTES

masdaf.com

Call Center:
0850 888 8 627 (MAS)

Orta Mahallesi Atayolu Caddesi
No:16 Tuzla - İstanbul / Türkiye

masdaf.com