Cooling Jacketed Submersible Sewage and Wastewater Pumps

EnduroDry Series

Operation And Maintenance Manual

MDKBK012026

masdaf

masdaf.com

masdaf

TÜV AUSTRIA

CE

EuP COMPLIANT

EC DECLARATION OF CONFORMITY

AT UYGUNLUK BEYANI

Manufacturer / *İmalatçı* : **MAS DAF MAKİNA SANAYİ A.Ş.**

Address / *Adres* : Orta Mah. Atayolu Cad. No: 16 Tuzla - İSTANBUL / TÜRKİYE
Organize Sanayi Bölgesi, Beyköy Beldesi, İstiklal OSB 1 Mah. 5. Cad. Dış Kapı No:7 Merkez/ DÜZCE

Name and address of the person authorised to compile the technical file
Teknik Dosyayı Derleyen Yetkili Kişi ve Adresi
Erhan ÖZDEMİR
Orta Mah. Atayolu Cad. No: 16
Tuzla - İSTANBUL / TÜRKİYE

The undersigned Company certifies under its sole responsibility that the item of equipment specified below satisfies the requirements of the mainly Machinery Directive 2006/42/EC which is apply to it.
The item of equipment identified below has been subject to internal manufacturing checks with monitoring of the final assessment by **MAS DAF MAKİNA SANAYİ A.Ş.**
Aşağıda tanımlanmış olan ürünler için Makine Emniyeti yönetmeliği 2006 / 42 / AT' nin uygulanabilen gerekliliklerinin yerine getirildiğini ve sorumluluğun alınmış olunduğunu beyan ederiz.
Aşağıda tanımlanan ürünler iç üretim kontrollerine bağlı olarak **MAS DAF MAKİNA SANAYİ A.Ş.** *tarafından kontrol edilmiştir.*

Equipment / *Ürün* : Submersible Sewage and Wastewater Pumps with Cooling Jacket
Soğutma Ceketli Dalgıç Kanalizasyon ve Atık Su Pompaları

Seri / *Model-Tip* : EnduroDry Series / *EnduroDry Serisi*

For pumps supplied with drivers/ *Elektrikli Pompa Üniteleri*
Related Directives / *Yönetmelikler*
2006/42/EC Machinery Directive / **2006/42/AT** *Makine Emniyeti Yönetmeliği*
2014/35/EU Low Voltage Directive / **2014/35/AB** *Alçak Gerilim Yönetmeliği*
2014/30/EU Electromagnetic Compatibility Directive / **2014/30/AB** *Elektromanyetik Uyumluluk Yönetmeliği*
EUP 2009/ 125 /EC Electric Used Products Directive/ *Elektrik Kullanan Ekipmanlar Direktifi (EUP)*

Regulations applied acc. to harmonize standards / *Uygulanan Uyumlaştırılmış Standartlar*
TS EN ISO 12100:2010, TS EN 809+A1, TS EN 60204-1:2018, TS EN 12599:2013.

We hereby declare that this equipment is intended to be incorporated into, or assembled with other machinery to constitute relevant machinery to comply with essential health and safety requirements of Directive The machinery covered by this declaration must not be put into service until the relevant machinery into which it is to be incorporated has been declared in conformity with provisions of the directive.
Ekipman, uygun bir makina oluşturmak amacıyla diğer ekipmanlar ile birleştirilirken ya da monte edilirken gerekli sağlık ve güvenlik yönetmeliklerine uyulması gerekmektedir.
Bu bildiri kapsamında yönetmelikte belirtilen bütün hükümler yerine getirilmeden makinanın devreye alınmaması gerekmektedir.

Place and date of issue / Yer ve Tarih : İstanbul, 08.12.2025
Name and position of authorized person
Yetkili Kişinin Adı ve Görevi : Erhan ÖZDEMİR
General Manager / Genel Müdür
Signature of authorized person
Yetkili Kişinin İmzası :

CONTENTS Page No

INTRODUCTION	5
1. IMPORTANT SAFETY MEASURES	6
2. GENERAL	6
2.1. Pump Description and Areas of Application	6
2.2. Performance Information	7
2.3. Warranty Conditions	7
2.4. Test	7
3. SAFE WORKING CONDITIONS	7
3.1. Personnel Training	7
3.2. Hazards Resulting from Non-Compliance with Safety Instructions	7
3.3. Safety Measures for the User/Operator	8
3.4. Safety measures for Maintenance and Installation	8
3.5. Replacement of Parts	8
4. TECHNICAL INFORMATION	8
4.1. Design	8
5. TRANSPORT AND STORAGE	9
5.1. Transport	9
5.2. Storage	10
6. ASSEMBLY/ INSTALLATION	10
6.1. Connection Type	10
6.2. Electrical Connections	12
7. COMMISSIONING, START-UP AND OPERATION	16
7.1. Control of Direction of Rotation	16
7.2. Starting Procedure	16
7.3. Stop Procedure	16
8. MAINTENANCE	17
8.1. Controls to be carried out during operation	17
8.2. Mechanical Seal	17
8.3. Auxiliary Components	17
9. SERVICE AND SPARE PARTS	17
9.1. Service	17
9.2. Spare parts	17
10. TIGHTENING TORQUE	18
11. DISASSEMBLY, REPAIR AND ASSEMBLY	19
11.1. Steps of EnduroDry Disassembly	19
11.2. Steps of EnduroDry Assembly	20
12. POSSIBLE FAILURES, CAUSES, SOLUTIONS	29
13. SECTIONAL DRAWINGS AND PARTS LISTS	30
14. EXPLODED IMAGE AND PARTS LIST	34

INTRODUCTION

- This manual contains installation, commissioning, and maintenance recommendations for the EnduroDry Cooling Jacketed Submersible Sewage and Wastewater Pump Series of **MAS-DAF MAKİNA SAN. A.Ş.**
- To ensure that a properly selected and correctly used pump operates reliably and without malfunction, please read this manual carefully before use and fully comply with all warnings and instructions specified herein. The pumps must be used only for their intended purposes. This user manual provides information on operating conditions, installation, commissioning, settings and main controls.
- These operating and maintenance instructions include recommendations of **MAS-DAF MAKİNA SAN. A.Ş.** These instructions do not take into account the operating and maintenance specific information for the system to which the pump is connected. This information must only be provided by the persons responsible for the construction and planning of the system (the system manufacturer).
- Please refer to the operating instructions of the system manufacturer.
- Pay attention to the warnings contained in this manual and ensure that the manual is read before installation and commissioning. **MAS-DAF MAKİNA SAN. A.Ş.** is not liable for accidents or their consequences resulting from negligence.
- For any questions or issues for which you may not find answers in this manual, you must seek assistance from **MAS-DAF MAKİNA SAN. A.Ş.** When requesting assistance, inform the pump nameplate data (pump label value) and, in particular, the serial number.
- The safety instructions in this manual cover the applicable national accident protection regulations.

Signs used in the operating instruction

		Read the instruction carefully and keep them for use when required.
		Warning Signs for Electrical Hazards
		Warning Signs for User Safety

1. IMPORTANT SAFETY MEASURES

To minimize occupational accidents that may occur during installation and commissioning, the following rules must be observed:

1. Do not operate without taking safety precautions related to the equipment. When required, rope/sling, safety strip, and masks must be used.
2. Ensure that there is a sufficient amount of oxygen in the environment and that no toxic gases are present.
3. Before using welding equipment or any electrical device, check for any risk of explosion.
4. To avoid endangering your health (dust, fumes, etc.), strictly inspect environmental cleanliness.
5. Always be aware of the risk of electrical accidents.
6. Do not lift the pump without first checking the lifting equipment (crane, slings, etc.).
7. Ensure that a by-pass line is provided.
8. Use appropriate personal protective equipment such as helmets, safety goggles, and protective footwear.
9. Within the specified safety distance, install protective barriers around the pump to prevent tripping or slipping hazards.
10. Dust, liquids, and gases that may cause overheating, short circuits, corrosion, or fire must be kept away from the pump unit, and the necessary safety measures must be taken.
11. Pay attention to the specified directions for transportation and storage.
12. All electrical and electronic applications must be carried out by authorized personnel in accordance with EN 60204-1 and/or local regulations.
13. Protect electrical equipment and the motor against overloading.
14. The pump unit must not be exposed to sudden temperature changes.
15. All personnel working with waste systems must be vaccinated against infectious diseases.
16. If hazardous liquids for humans or the environment are used in the pump, take safety measures by providing a protective cap against the possibility of the liquid spraying and collecting it in a suitable container against the possibility of leakage.

Comply with all other applicable health and safety rules, laws, and regulations.

2. GENERAL

2.1. Pump Description and Areas of Application

The EnduroDry series cooling-jacketed submersible sewage and wastewater pumps are designed for the transport of domestic and industrial raw sewage, in sewage treatment plants, the transport of sludge/muddy liquids and liquids containing solid particles, the transport of factory waste liquids, liquids containing fibrous particles, and other similar applications. These are;

D Type Double Blade Impeller designed for pumping wastewater containing sludge and solid particles up to a specified size but free of fibers, gas or air.

P-type impeller that shreds large particles and fibrous waste in the liquid and transfers them out of the system.

CAUTION

For liquids with chemical or physical properties other than these specifications, please contact MAS-DAF MAKİNA SAN A.Ş.

Technical Specifications of EnduroDry Type Pumps

Discharge Flanges	**DN 80 - DN 200**
Operating Pressure	**10 bar**
Q	**20 – 900 m3/h**
Hm	**up to 75 m**
Speed	**1000 - 3600 rpm**

2.2. Performance Information

The actual performance of the pump may be obtained from the order page and / or and/or from the test report. This information is stated on the pump label.

The performance curves drawn and shown in the catalog are based on a fluid (water) with density of $\rho = 1\ kg/dm^3$ and a kinematic viscosity of $\nu = 1\ cSt$. For those liquids whose densities and viscosities are different from those of water, please consult with **MAS-DAF MAKİNA SANAYİ A.Ş.** since the performance curves vary with density and viscosity.

CAUTION

The pump must not be operated outside the selection parameters specified in the purchase order and supplied accordingly by the company.

Ensure that these instructions are obeyed for the safe operation of the pump.

2.3. Warranty Conditions

The products in our sales program are covered by the warranty and guarantee of our company and the international **MAS-DAF MAKİNA SAN. A.Ş.** organization.

The warranty conditions are valid provided that the installation and commissioning of the pump are carried out in accordance with the warnings and instructions specified in this manual.

2.4. Test

The pump performance values are valid under the factory test conditions.

3. SAFE WORKING CONDITIONS

This manual contains basic safety instructions for installation, operation, and maintenance. It must be read by all personnel involved before installation and commissioning. The manual must always be kept readily available at the installation site. In addition to the general safety instructions, the important safety measures specified on the first pages and the safety measures repeated in other sections must also be observed.

3.1. Personnel Training

Operating, maintenance, inspection, and installation personnel must possess the necessary knowledge to perform their assigned tasks. The responsibilities, qualifications, and control duties/tasks of this personnel must be defined by the customer, and it must be ensured that the personnel fully understand the contents of the operating instructions.

If the personnel do not have sufficient knowledge, the necessary training must be provided by the operator. Upon request, training support is provided by the manufacturer/vendor on behalf of the operator.

CAUTION

Failure to comply with safety measures and insufficient training of personnel may pose risks not only to personnel but also to the machine and the environment. **MAS-DAF MAKİNA SAN. A.Ş.** is not liable for any damages that may occur.

3.2. Hazards Resulting from Non-Compliance with Safety Instructions

Failure to comply with safety instructions may endanger persons, the environment, and the machine, and may result in risks and damage. Failure to follow the safety instructions may lead to the following hazards:

Critical functions of the factory/plant may be interrupted.

Access routes required for maintenance and service may be blocked.

Electrical, mechanical or chemical effects may endanger human life.

3.3. Safety Measures for the User/Operator

All hazardous, hot, or cold parts at the installation site must be protected against accidental contact.

Moving parts, such as rigid couplings, must be protected against accidental contact. The guards of these parts must not be removed while the machine is in operation. All hazards arising from electrical energy must be eliminated. Please refer to the regulations of your local electric company for details on this matter.

3.4. Safety measures for Maintenance and Installation

The operating company must ensure that all maintenance, inspection, and installation work/operating is carried out by authorized and qualified personnel who are familiar with the operating instructions. Work on the machine must only be carried out when the machine is at a standstill.

Pumps and sets that pump liquids harmful to health must be completely and properly cleaned. Upon completion of work/operating, all safety and protective devices must be reinstalled and returned to operational condition.

3.5. Replacement of Parts

Machine modifications and alterations must only be carried out after consultation with the manufacturer. Only replacement parts and accessories approved by the manufacturer are essential for safety.

NOTE: The use of non-approved or unsuitable parts is not the responsibility of **MAS-DAF MAKİNA SAN. A.Ş.**

4. TECHNICAL INFORMATION

4.1. Design

The EnduroDry Series cooling-jacketed submersible sewage and wastewater pumps are designed for pumping solids, raw sewage, and industrial wastewater. The EnduroDry series pumps, available in two types with a double-channel and non-clogging impeller, are used in the transportation of domestic and industrial raw sewage, sewage treatment plants, liquids containing mud and solid particles, factory waste liquids, liquids containing fibrous particles, and other applications.

Please consult our company for liquids containing fibrous particles.

4.1.1. Volute Casing

The volute casing has a large profile and is designed for handling large solid particles. Solid particles that may pass through the impeller, may be easily handled with the volute casing.

4.1.2. Impellers

D-Type Double Vane Impeller

D-type impellers are designed with double vanes. Its symmetrical design ensures balanced operation without vibration. These type of impellers are suitable for wastewater containing up to certain size sludge and solid particles but not containing fiber, gaseous or air. This is often used for pumping sewage that has passed through the grill, mechanically treated sewage, industrial effluents, activated sludge and flood waters.

P-Type Impeller

This shreds large particles and fibrous waste in the liquid and transfers them from the system thanks to the shredder vane design.

The specially designed shredder system is designed for the difficult conditions in which it works. The shredding vanes are manufactured from corrosion-resistant stainless steel using precision casting technology and, after a heat-treatment process, are provided high resistance to wear and breakage/fracture under the most demanding operating conditions.

Spare parts

Please refer to the technical drawing of the pump for the necessary spare parts.

4.1.3. Shaft

The pumps are supported by a solid shaft capable of handling different loading conditions.

Since the shaft dimensions are highly resistant to bending and the distance between the bearing and the sealing is short, the pump may operate in optimal conditions for sealing.

4.1.4. Bearing and Lubrication

Lifelong grease lubricated bearings are used in EnduroDry series submersible pumps. There is no need any extra lubrication for bearings. 3300/6300 series bearings may be used on the pump side and motor side.

4.1.5. Seals

Shaft Sealing

To prevent water pass to motor, two sets of mechanical seals with oil container in the middle of these seals are used.

In standard production, SiC-SiC mechanical seals are used for sealing.

Water Leakage Warning System

An electrode system is used in case of water leakage caused by worn out mechanical seal or any other reason.

4.1.6. Usage

MAS-DAF EnduroDry Series cooling-jacketed submersible sewage and wastewater pumps have been developed for pumping domestic and industrial wastewater containing large solid particles. These pumps are suitable for fully submerged operation. EnduroDry series pumps with different types of impellers are used for different purposes, such as pumping clean and wastewater, sewage and sludge containing solid particles and fibrous materials.

5. TRANSPORT AND STORAGE

Suction, discharge and all auxiliary parts must be closed during transportation and storage. Flange covers must be removed when assembling the pump unit.

5.1. Transport

The pump and pump group must be transported safely to the installation site using appropriate lifting equipment.

CAUTION

Applicable general load lifting safety regulations must be complied with. Please use a suspension system as shown in the figure below when lifting and transporting pump units. Please prefer a stranded and cloth wire rope for hanging.

Do not lift the pump by the cables.

TRUE FALSE

Figure 2: Transport of Pump Group

Improper lifting may result in personnel injury and damage to the pump unit.

Damages caused in transport

Check the pump upon delivery. If any damage is detected, notify the company immediately.

5.2. Storage

During storage, keep the unit in a clean and dry place.

In cases where the pump is out of operation for a long period of time (to be put on standby), follow the instructions below.

1. Clean the pump casing and impeller by briefly flushing clean liquid through the suction and discharge lines.
2. Drain the pump casing, as well as suction and discharge line.
3. Spray a suitable brand of anti-rust and anti-corrosion spray inside the pump casing.
4. If the pump is not to be operated immediately, it must be kept in an upright position in a clean and dry area.

6. ASSEMBLY/ INSTALLATION

6.1. Connection Type

I. **Suspension Connection:** The pump is hanged by a special suspension part connected to the inlet of the discharge pipe in the upper slab in this application. The pump does not sit on the bottom of sump, it is suspended. If required, the elbow joint may also be used as a non-return valve. The steel discharge pipe between the pump and the suspension part keeps the pump suspended. Suspended connection may be applied in types 50-160, 50-200 (up to 5.5kW), and 80-190. It must be kept in mind by the user that since these pumps are lighter in the suspension connection option, they do not overload the discharge pipe and provide safer operation. It is not necessary that the bottom of the sump is hard and smooth in this application. For the suspension connection, a complete suspension set including the suspension elbow is used.

Figure 3: Suspension Connection Type

II. **Hose Connection:** In such applications the pump must sit freely in the sump. The ground/base of the sump must be flat and solid. (in order to make the pump not to sink but to stay vertically) The pump is lowered into the sump by means of a chain and uplifted. Flexible hose must be used as discharge pipe for ease of assembly and disassembly.

The water is pumped up to the surface with this flexible hose and may be connected to a pipe system if necessary.

Figure 4: Hose Connection Type

III. Automatic Coupling System: This application is a developed system to ensure that the pump may be easily connected and disconnected from the installation. In order to make the pump flange-pipe connection during coupling, there is no need to empty the sump or remove and install bolts etc.

Figure 5: Part Numbers of Automatic Coupling System

1. **Conveying Elbow:** It is a special strong and broad-based elbow which placed to the tank base before the system is commissioned. This elbow conveys the weight of the pump. It must therefore be very firmly assembled to the tank base.
2. **Slideway:** It consists of two parallel pipes. It is connected to the conveying elbow from the bottom. It acts as a guide when lowering the pump. The length is adjusted on site according to the depth of the tank base.
3. Coupling Hook: It is the conveyor special part connected to the discharge flange of the pump.
4. Special Coupling Gasket: It is the rubber gasket inside the coupling hook. Through its special shape, it prevents water leakage by expanding while the pump is running/operating.
5. Chain Conveyor: This allows the pump to be immersed in and out of water. This is available for all EnduroDry pump types.

Mode of Operation for the Automatic Coupling System

Figure 6

1. When the pump is suspended from the suspension hole at the rear (opposite to the discharge flange), it is naturally slightly inclined. In this case, the hook is passed to slideway.

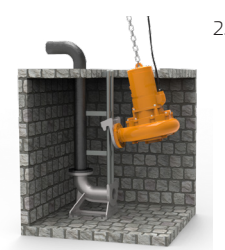

Figure 7

2. The pump is lowered/slided down in the inclined state.

Figure 8

3. When the special slots of the hook come into contact with the support conveyor on the elbow, the pump stops moving. The chain conveyor is still tense.

Figure 9

4. When the chain conveyor is released, the weight of the pump is loaded on the elbow via the hook. The pressure of the pump weight on the elbow ensures that the gasket is pressed against the elbow surface. When pressure occurs in the pump, the gasket expands and prevents liquid leakage.

It is sufficient to pull it out of the chain to dismantle the pump. The conveying elbow and discharge pipe for the automatic coupling system must be installed when the bottom of sump is dry (during construction). If this process is done later, the system may not be robust enough.

6.2. Electrical Connections

6.2.1. General

- All electrical work must be carried out by a qualified electrician. All main electrical equipment must be earthed. Failure to ignore this warning may result in a fatal accident.
- Ensure that the earth connection is connected correctly by testing. Use the MASDAF RLE-1C Motor Protection and Control Relay supplied with the pump. Pumps operated without the RLE-1C relay are not covered by warranty.*
- Motor Control Panels must be manufactured according to the circuit diagrams in this manual. If a different circuit diagram is used, please contact our technical service and obtain their approval.
- Ensure that the currents and cable diameters of contactors, overload relays and fuses are suitable for motors nominal currents.
- Check the mains voltage and ensure that it corresponds to the value on the motor label.
- Check the connection of motor cable socket and secure the tightness before initial operation.
- Connect the energy and control cable to the motor control panel complying with the colors and diameters stated in the diagrams.
- Ensure the outer cover/isolation of the energy cable is protected against damages that might be caused by sharp metal or concrete corners and prevent it from being squeezed in narrow spaces.
- Never use the energy and control cables of the pump to lift the pump.

*Not applicable where the panel is supplied with the pump by **MAS-DAF MAKİNA SANAYİ A.Ş.**.

6.2.2. RLE-1C Motor Protection and Control Relay

MAS-DAF RLE-1C Motor Protection and Control Relay is very important part of the EnduroDry Series cooling-jacketed submersible sewage pump. It is supplied with the pump and is used to ensure proper operation of the motor and pump.

When the appliance is switched on, all indicators activate and deactivate in sequence. The device checks itself, if there is no malfunction, the green NORMAL indicator activates and indicates that the

motor is ready to run.

Water Leakage: In case of that water enters the oil container or the motor casing, the red warning indicator activates and the motor is stopped by the relay. The indicator flashes at short intervals, at the same time the alarm relay is activated until the RESET button on the RELAY is pressed. The motor is not activated when the RESET button is not pressed in this fault. In this case, it is necessary to remove and maintain the pump and repair the fault that caused the water leakage. The flashing signal continues until the RESET button is pressed. The indicator is deactivated and the alarm relay is deactivated when the RESET button is pressed.

Overheating: If the motor winding temperature exceeds 130^{0}C, the red indicator activates and the motor is stopped. The indicator signals by flashing at short intervals. When the motor cools down, it is activated automatically again, but the flashing signal continues until the RESET button is pressed. The indicator is deactivated and the alarm relay is deactivated when the RESET button is pressed.

Overloading: In case of overload, the motor is stopped when the current drawn exceeds the thermal relay setting value. The indicator flashes at short intervals until the RESET button on the relay is pressed. At the same time the alarm relay cuts in. In this case, after overhauling the malfunction, the RESET button on the RELAY is pressed and the thermal relay is RESET and then the situation returns to normal.

Maximum Level: When the maximum water level set by a floater connected to the relay input is reached, a signal is sent from the floater to the relay. In this case, the yellow MAX indicator activates and flashes at short intervals to signals. At the same time the alarm relay cuts in. This is only recognized as a warning alarm and has no effect on motor operation or shutdown. The flashing signal continues until the RESET button is pressed. The indicator is deactivated and the alarm relay is deactivated when the RESET button is pressed.

Phase Failure: For phase error and phase sequence control, an external phase protection relay in the panel is connected to the input of the protection and control relay and phase error control is carried out. If there is a problem with the mains voltage or the phase sequence is incorrect, the red indicator activates and the motor is stopped. When the fault is eliminated, the motor re-activates automatically, but the flashing signal continues until the RESET button is pressed. When the RESET button is pressed, the indicator deactivates and the alarm relay deactivates.

Ready: When all the red alarm indicator on the RELAY are off, that is, in the normal position, the green NORMAL indicator activates and indicates that the motor is ready to run. This indicator deactivates when there is a malfunction.

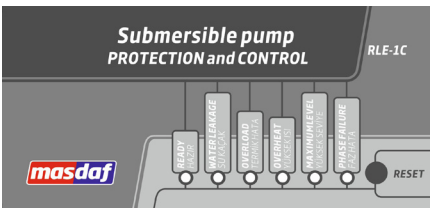

Figure 10: RLE-1C Motor Protection and Control Relay

6.2.3. Control Panel

EnduroDry submersible pumps may be operated as single pumps or groups of two (2) and three (3) pumps with the control panel, which may be requested as an extra, designed for safer operation.

In the pump operating principle of a multi-pump panel, all pumps may be operated simultaneously or as a backup.

The control panel is in protection class IP 55 and it is isolated from dust, splashing water and wastewater environment gas. Short circuit protection, phase failure and protection against phase sequence, thermistor protection, water leakage protection, overcurrent protection, the indicator lights, manual-automatic package, start-stop as manual and the main switch equipments are available control panel.

Floater is included in the package for submersible pumps.

When the pump is supplied with control panel, there is not need a relay. In this case the control panel makes the protection task of the motor.

When the pump is supplied without control panel, relay is sent with the pump.

CAUTION

If the control panel is not supplied by our company, our company is not responsible for malfunctions that may occur due to electricity supply. In this case, the pump and relay are out of warranty.

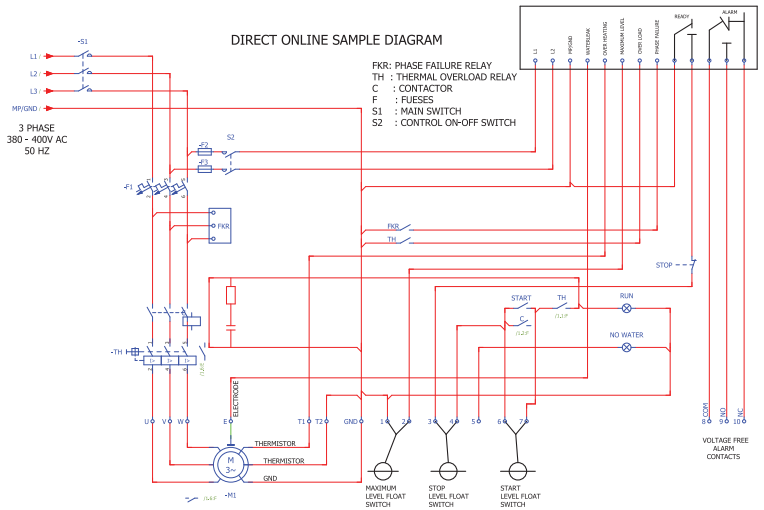

Figure 11: Motor Control and Protection Relay Circuit Diagram - Star Connection (y-connection)

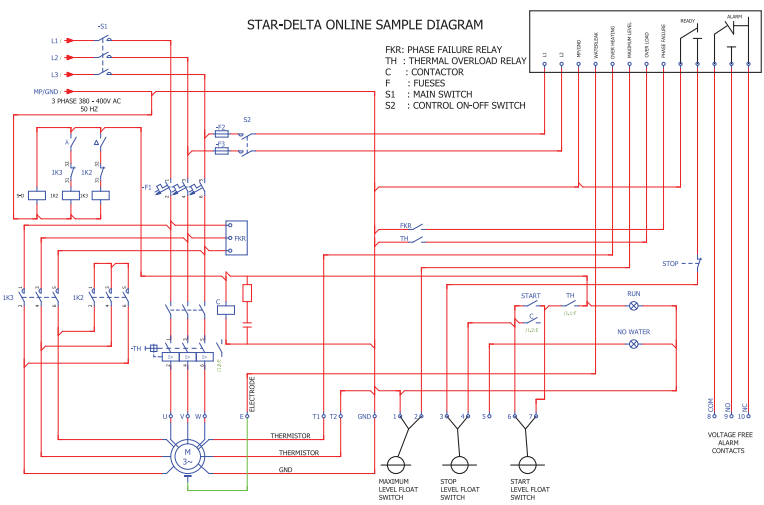

Figure 12: Motor Control and Protection Relay Circuit Diagram - Star - Delta Connection

7. COMMISSIONING, START-UP AND OPERATION

Before pump is connected to the system, some points must be controlled.

- The piping must be assembled.
- The piping must be drained and the line valves must be closed.
- The entire pump must be in water.
- If the motor starting panel is energized, electricity/energy
- must be cut off by switches and fuses.
- Pump casing, impeller and the site where the pump is kept must be checked for oil leakage.
- The cable ends must never be wetted or immersed in water.
- The voltage difference between the phases in the system to which the motor is connected must not be more than 5%.
- Measures must be taken to protect the motor from high and low voltages in the panel layout. Voltage control and phase protection relays with appropriate limits must be used.
- The direction of rotation must be checked and if it is reversed, the cable connection must be changed and corrected by licensed electricians.

CAUTION

Do not operate the pump dry (WITHOUT WATER).

7.1. Control of Direction of Rotation

CAUTION

All pumps and all EnduroDry Series cooling-jacketed submersible wastewater and sewage pumps must rotate clockwise (to the right) when viewed from above. If all electrical connections have been made according to the instructions, the pump rotates in the correct direction. However, it is strongly recommended to check the correct direction of rotation before installing the pump inside the sump. To check the direction of rotation while the pump is suspended in the air, press the START button and then quickly press the STOP button. The impeller may not be seen, but the reaction direction of the casing may be observed.

There are three (3) situations;

1. If the reaction of the casing is counterclockwise (left), the direction of rotation is (right) correct. Electrical connections have been made correctly. The pump may be installed in the sump.
2. If the reaction of the casing is clockwise (right), the direction of rotation is wrong (left). To fix the problem, the position of the two motor cables on the panel must be changed. Please recheck the direction of rotation after exchange.
3. When the start button is pressed, if the contactor on the panel is not energized, the PHASE FAILURE indicator flashes and the motor does not run because there is a phase sequence failure or one of the phases is not energized. Ensure that all three phases are energized. Then, check the phase sequence. The correct sequence must be set according to the direction of rotation.

7.2. Starting Procedure

When the control panel is energized, ensure that the green indicator indicator (NORMAL) activates. This indicates that there are no failure and that the electrical connections are done correctly. The motor starts when the START button is pressed or the water level is increased to the set level.

7.3. Stop Procedure

The motor may be stopped manually by pressing the STOP button. The motor also automatically stops when the water level drops below the minimum set level. If another application is used instead of Level Controlled Automatic Starting System, please have **MAS-DAF MAKİNA SANAYİ**

A.Ş.'s approval for changed electrical diagram. **MAS-DAF MAKİNA SANAYİ A.Ş.** refuses to assume any responsibility if the pump used for different applications without prior written permission.

8. MAINTENANCE

CAUTION

- Maintenance operations must only be carried out by authorized personnel. Protective clothing must be worn at all times. The personnel must also beware of high temperatures and harmful and/or caustic liquids. Ensure that personnel reads the manual and adapts it to the specific sections for the specific tasks required.
- The instructions in the safety measures must be executed during maintenance and repair.
- Regular monitoring and maintenance increase the life of the pump and motor.

8.1. Controls to be carried out during operation

- The pump must never be operated without water.
- The pump must not be operated in discharge valve closed (Zero Flow) position for a long time.
- All auxiliary systems must be activated while the pump is running.
- If you have a standby pump in your system, keep the spare pump ready for operation by running it once a week for a short time. Check the auxiliary systems of these pumps.

8.2. Mechanical Seal

The mechanical seal is an advanced sealing system that provides complete leak-tightness and requires less maintenance than packing seals.

1. It ensures reliable sealing under heavy operating conditions. (In wastewater pumps, chemical processes, refinery and industrial pump applications).
2. It is easy to install and requires less maintenance.
3. It does not cause wear on the shaft.
4. The operation of the shaft seal does not depend on the quality of the shaft surface.

8.3. Auxiliary Components

Check regularly the fittings/parts and the gaskets, replace the worn out pieces.

9. SERVICE AND SPARE PARTS

9.1. Service

Our Customer Service Department provides after sales services/service support. The operator must have the assembly/disassembly (mounting/dismounting) operations performed by authorized or trained personnel. Ensure that the inside of pump is empty and clean before assembly/disassembly. This also applies to pumps sent to our factory or to authorized service centers.

Ensure that personnel and environmental safety in all operations carried out on site.

9.2. Spare parts

Spare parts for the EnduroDry Series pumps are guaranteed to be supplied by **MAS-DAF MAKİNA SAN. A.Ş.** for a period of TEN (10) years from the date of manufacture.

When ordering spare parts, please provide us with the following values written on your pump's label:

Pump type and size:

Motor power and speed:

Pump serial number:

Flow Rate and Head:

If spare parts are to be kept in stock or warehouse, the quantities listed in the table below for two years of operation are recommended, depending on the number of pumps of the same type.

Component Name	The number of equivalent pumps in the installation						
	1-2	3	4	5	6-7	8-9	10+
Impeller	1	1	2	2	3	4	%50
Rotor Shaft	-	-	1	1	1	2	%20
Impeller Nut	1	1	2	2	3	4	%50
Package Rotor Stator	-	-	1	1	1	2	%20
Bearing(Motor Side)	1	2	2	3	4	5	%60
Bearing(Pump Side)	1	2	2	3	4	5	%60
Mechanical Seal	2	3	4	5	7	9	%100
O-rings	1	2	2	3	4	5	%60

Table 1: Spare Parts List

10. TIGHTENING TORQUE

TREAD DIAMETER	MAXIMUM TIGHTENING TORQUE (Nm)		
	Class Features		
	8.8	10.9	12.9
M4	2.9	4	4.9
M5	5.7	8.1	9.7
M6	9.8	14	17
M8	24	33	40
M10	47	65	79
M12	81	114	136
M14	135	200	232
M16	194	277	333
M18	300	430	490
M20	385	541	649
M22	580	820	950
M24	665	935	1120
M27	1100	1550	1774
M30	1310	1840	2210
M33	1970	2770	3271
M36	2530	3560	4205

Table 2: Tightening Torque List

11. DISASSEMBLY, REPAIR AND ASSEMBLY

Before starting work on the pump, disconnect all electrical connections and ensure to take the necessary precautions to prevent accidental start-up.

Follow the safety measures specified in the "Safety instructions" section.

11.1. Steps of EnduroDry Disassembly

	Steps of EnduroDry Disassembly	P-Type	D-Type
1	Drain the antifreeze from the plug (604).	✓	✓
2	Disconnect the cable connections and remove the Top Cover (51) from the Motor Casing (03).	✓	✓
3	Remove the Lifting Handle (32) from the Top Cover (51).	✓	✓
4	Disconnect the motor terminals from the Top Bearing Housing (31).	✓	✓
5	Remove the Outer Cooling Jacket (05) from the Motor Casing (03). Remove the Inner Cooling Jacket (04) from the Motor Casing (03).	✓	✓
6	Position the Motor Casing (03) vertically with the lower side facing upward.	✓	✓
7	Remove the Foot Support (609) from the Casing Cover (55).	✓	✓
8	Remove the Casing Cover (55) from the Volute Casing (01).	✓	✓
9	Remove the Shredder Vane (80) from the Casing Cover (55).	✓	
10	Remove the Spacer (250) from the seal. Remove the Impeller Washer (370), then pull the Impeller (20) off the Shaft (60).	✓	✓
11	Remove the Spacer (250) from the Shaft (60) and from the Mechanical Seal (240).	✓	✓
12	Remove the Labyrinth Cover (40) and Labyrinth (41) from the Adapter (50).	✓	✓
13	Remove the Adapter (50) from the Bottom Bearing Housing (28) and the Motor Casing (03).	✓	✓
14	Remove the Circulation Impeller (70) and Impeller Key (210) from the Mechanical Seal (240).	✓	✓
15	Remove the Shaft (60) from the Motor Casing (03).	✓	✓
16	Remove the Top Bearing Housing (31) from the Motor Casing (03).	✓	✓
17	Remove the Oil Seal (220) from the Bottom Bearing Housing (30), then remove the Electrode Rubber (412), Electrode (600), and Bottom Bearing Cover (28).	✓	✓
18	Remove the Top Bearing Cover (29) from the Shaft (60).	✓	✓

11.2. Steps of EnduroDry Assembly

	Steps of EnduroDry Assembly	P-Type	D-Type
1	Install the Top Bearing Cover (29) onto the Shaft (60) and mount Bearings (200) & (201) using Retaining Ring (232) and (231).	✓	✓
2	Insert the Oil Seal (220) into the Bottom Bearing Housing (30), mount it onto the Shaft (60), then install the Electrode Rubber (412) and Electrode (600). Install the Bottom Bearing Cover (28).	✓	✓
3	Install the Top Bearing Housing (31) into the Motor Casing (03).	✓	✓
4	Position the Motor Casing (03) upside down and insert the Shaft Assembly (60) with mounted components into the casing.	✓	✓
5	Install the Mechanical Seal (240), then mount the Circulation Impeller (70) together with the Impeller Key (210).	✓	✓
6	Mount the Adapter (50) to the Bottom Bearing Housing (28) and Motor Casing (03) using bolts.	✓	✓
7	Install the Labyrinth (41) and Labyrinth Cover (40) onto the Adapter (50) using bolts.	✓	✓
8	Install the Spacer (250) onto the Shaft (60), then install the Mechanical Seal (240).	✓	✓
9	Position the Spacer (250) over the seal. Install the Impeller (20) onto the Shaft (60) using the Key (211) and secure with the Impeller Washer (370) and bolt.	✓	✓
10	Mount the Shredder Vane (80) onto the Casing Cover (55) using bolts.	✓	
11	Install the Casing Cover (55) onto the Volute Casing (01) using bolts.	✓	✓
12	Install the Foot Support (609) onto the Casing Cover (55) using bolts.	✓	✓
13	Lift the Motor Casing (03) with a crane and mount it so that the Impeller (20) enters the Volute Casing (01), then bolt it into position.	✓	✓
14	Install the Inner Cooling Jacket (04) onto the Motor Casing (03) Install the Outer Cooling Jacket (05) with the U-profile Gasket (413) in place.	✓	✓
15	Connect the motor terminals to the Top Bearing Housing (31).	✓	✓
16	Install the Lifting Handle (32) onto the Top Cover (51) using bolts.	✓	✓
17	Install the Top Cover (51) with the cable connections completed onto the Motor Casing (03) using bolts.	✓	✓
18	Fill the antifreeze from the Plug (604).	✓	✓

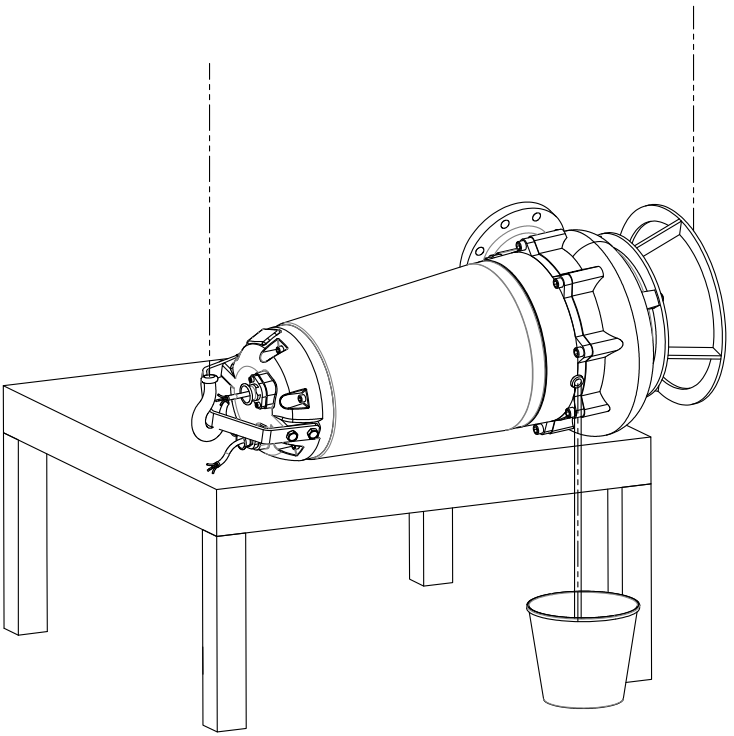

Antifreeze Draining

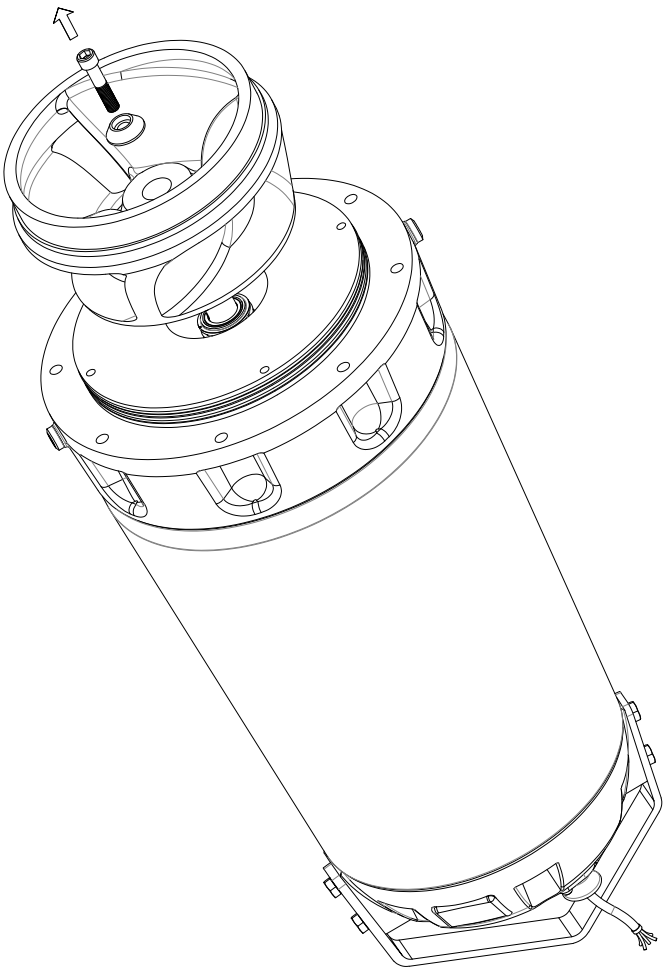

Impeller Removal

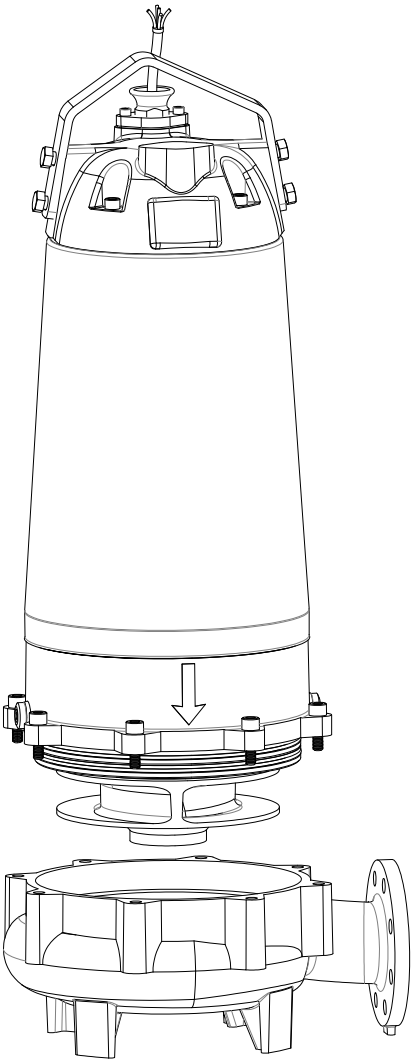

Mounting the Motor Casing to the Volute Casing

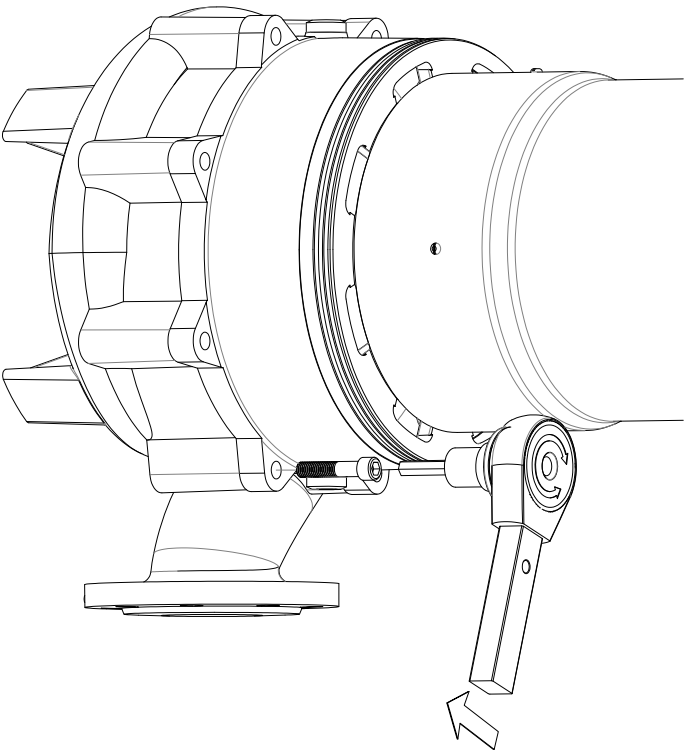

Mounting the Adapter to the Volute Casing

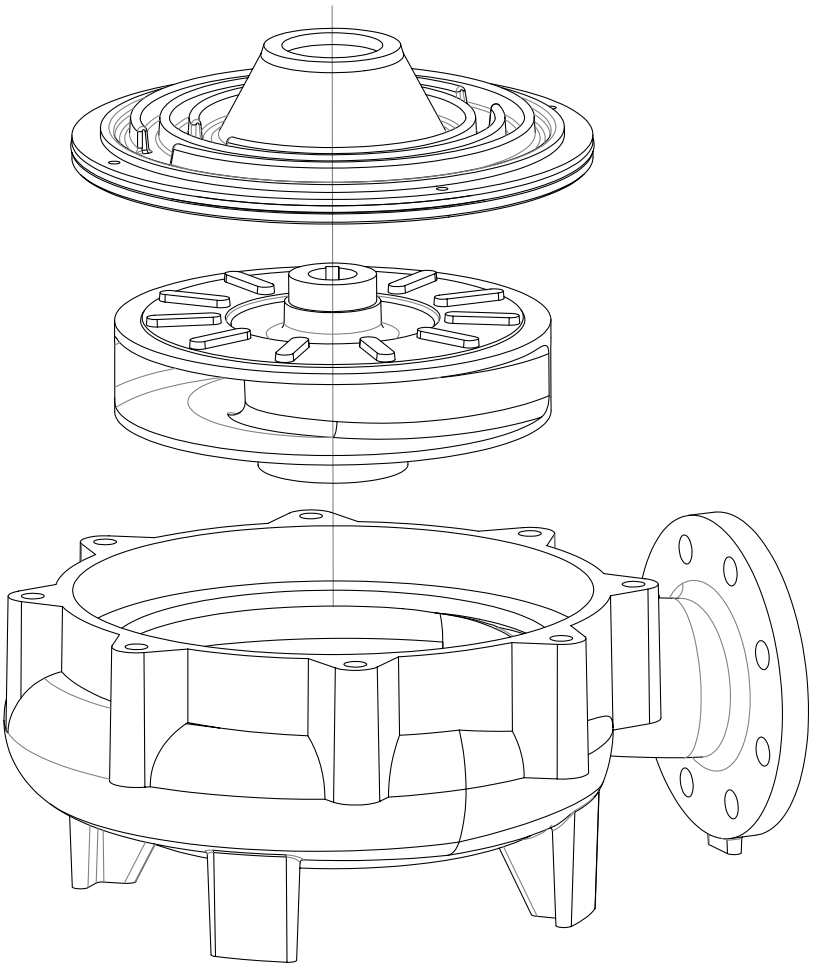

Volute, Impeller and Labyrinth Assembly

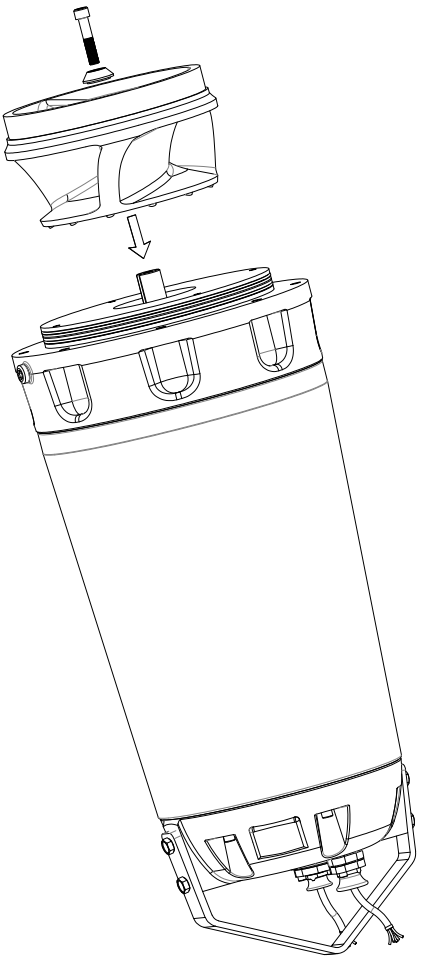

Impeller Installation

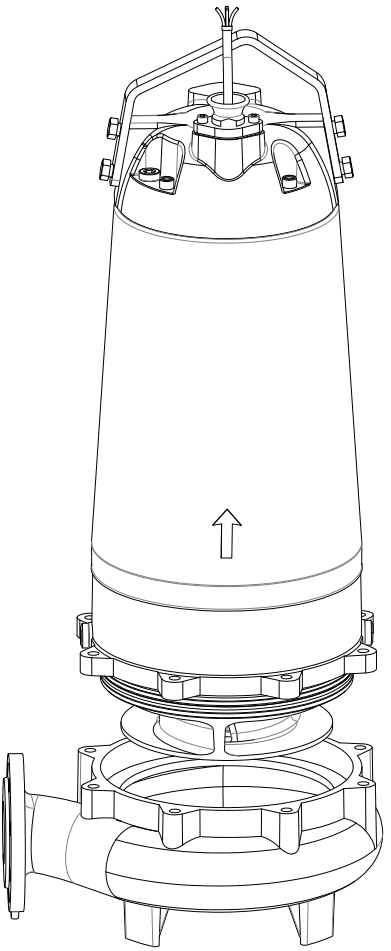

Removing the Motor Casing from the Volute Casing

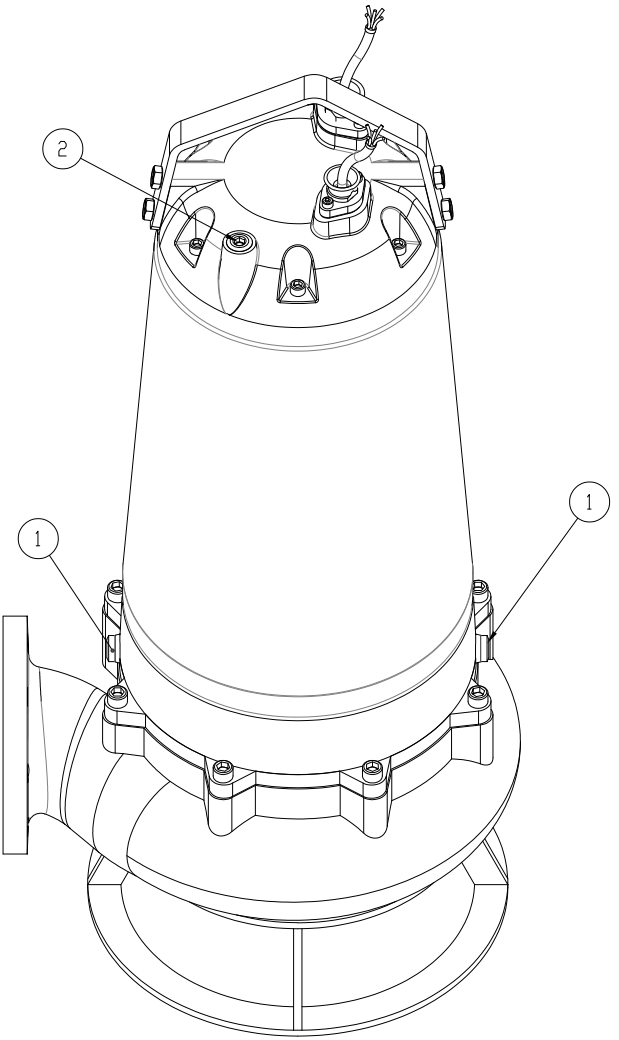

Plugs

12. POSSIBLE FAILURES, CAUSES, SOLUTIONS

The table below lists common faults and recommended corrective actions. Please apply to the Customers' Service Department of our company when a generic solution is not found to your problem.

The pump must always be depressurized and inoperative when troubleshooting faults.

POSSIBLE FAULT	POSSIBLE CAUSE	POSSIBLE SOLUTIONS
Pump does not run (motor does not start)	No power supply in the line	The electrical circuits must be inspected by authorized and qualified electricians.
	Low voltage	Check the voltage
	Blown fuse	Fuses must be replaced by authorized and qualified electrician personnel.
	Faulty floater.	Check the floater
	Power or control cable is broken	Replace the power and control cable.
Low capacity or pump does not deliver	Reverse direction of rotation.	Check the direction of rotation and correct it if necessary.
	Discharge piping is blocked.	The discharge pipe must be cleaned by back flushing (backwashing).
	The manometric head is too high.	Recalculate static pressure and system losses.
	Impeller or volute is clogged/blocked.	The pump must be removed and cleaned.
	The impeller is excessively worn or broken.	The impeller must be replaced.
The overheating led is on	The level of the stop floater is too low. The motor runs dry.	Raise the level of the stop floater.
	The manometric head is too high.	Adjust the outlet/terminal valve according to the manometric head stated on the name plate / the label.
	Pumped liquid is very dense or its specific gravity is high.	Adjust the outlet/terminal valve according to the current stated on the name plate / the label.
If the water leakage indicator is on	The power and control cable is crushed and torn.	Replace the power cable.
	The o-rings are damaged.	Do not open the electrical connections, the motor casing and the bath lubrication. Call Services of **MAS-DAF MAKİNA SAN. A.Ş.** immediately for technical support.
	Mechanical seals are damaged.	
	Inside of the casing is filled with solid particles.	
	The relay connections/links are wrong.	
	The relay is faulty.	

13. SECTIONAL DRAWINGS AND PARTS LISTS

For Type-D

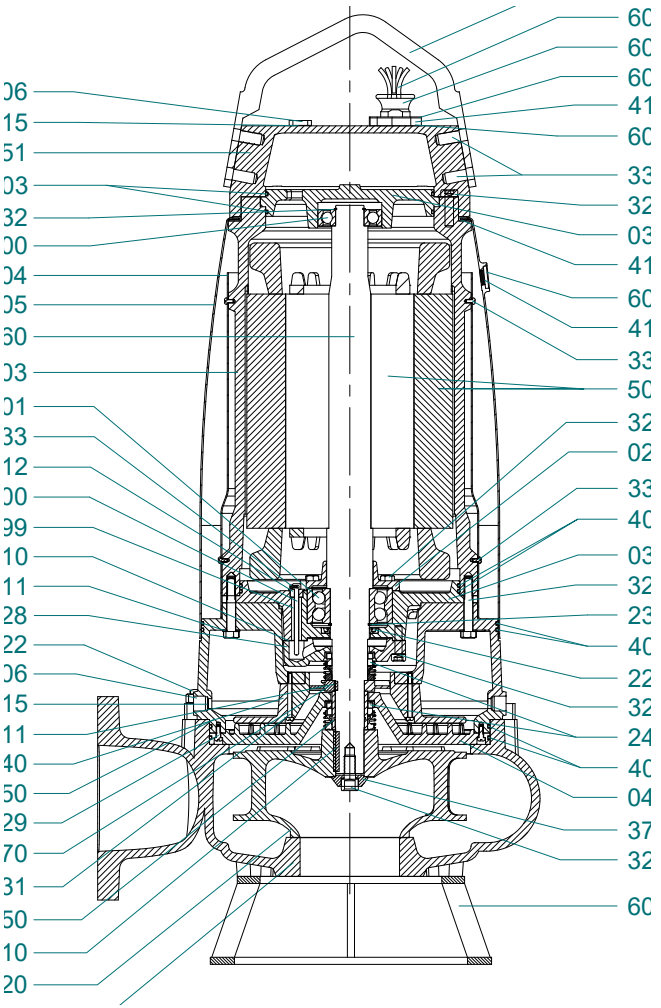

Part No	Part Name	Part No	Part Name	Part No	Part Name
1	Volute Casing	210	Impeller Key	370	Impeller Washer
3	Motor Casing	211	Key	400	O-Ring
4	Inner Cooling Jacket	220	Oil Seal	401	O-Ring
5	External Cooling Jacket	231	Retaining Ring	402	O-Ring
20	Impeller	232	Retaining Ring	403	O-Ring
28	Bottom Bearing Cover	240	Mechanical Seal	410	Cylinder Head Gasket
29	Top Bearing Cover	250	Spacer	411	Gasket
30	Lower Bearing Housing	322	Hex Socket Head Bolt	412	Gasket
31	Top Bearing Housing	323	Hex Socket Head Bolt	413	Gasket
32	Lifting Handle	324	Hex Socket Head Bolt	415	Gasket
40	Labyrinth Cover	325	Hex Socket Head Bolt	416	Gasket
41	Labyrinth	326	Hexagon Head Bolt	500	Rotor-Stator
50	Adapter	327	Hex Socket Head Bolt	600	Electrode
51	Top Cover	329	Hex Socket Head Bolt	601	Gland Cable Clamp
60	Shaft	330	Hex Socket Head Bolt	602	Washer
70	Circulation Impeller	331	Hex Socket Head Bolt	603	Glen (Cablo)
200	Top Bearing	332	Hexagon Head Bolt	606	Plug
201	Bottom Bearing	333	Hex Socket Head Bolt	607	Cable

For Type-P

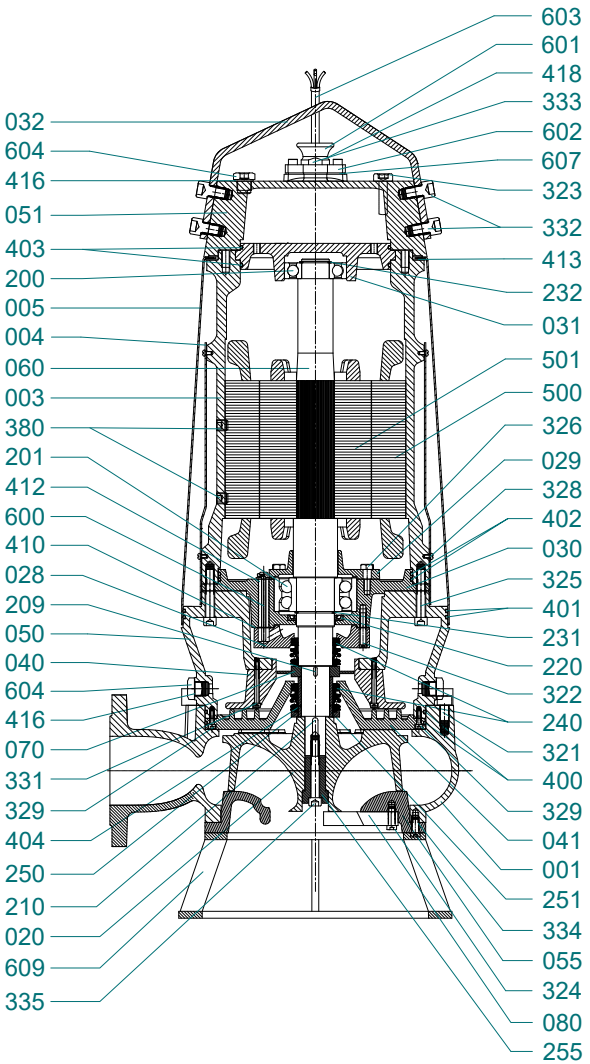
032
604
416
051
403
200
005
004
060
003
380
201
412
600
410
028
209
050
040
604
416
070
331
329
404
250
210
020
609
335
603
601
418
333
602
607
323
332
413
232
031
501
500
326
029
328
402
030
325
401
231
220
322
240
321
400
329
041
001
251
334
055
324
080
255

Part No	Part Name	Part No	Part Name	Part No	Part Name
1	Volute Casing	210	Key	370	Impeller Washer
3	Motor Casing	220	Oil Seal	380	Setsrew
4	Inner Cooling Jacket	231	Retaining Ring	400	O-Ring
5	External Cooling Jacket	232	Retaining Ring	401	O-Ring
20	Impeller	240	Mechanical Seal	402	O-Ring
28	Bottom Bearing Cover	250	Spacer	403	O-Ring
29	Top Bearing Cover	251	Seal Sleeve	404	O-Ring
30	Lower Bearing Housing	255	Impeller Washer	410	Cylinder Head Gasket
31	Top Bearing Housing	320	Hexagon Head Bolt	412	Gasket
32	Lifting Handle	321	Hex Socket Head Bolt	413	Gasket
40	Labyrinth Cover	322	Hexagon Head Bolt	416	Plug
41	Labyrinth	323	Hex Socket Head Bolt	418	Gasket
50	Adapter	324	Hex Socket Head Bolt	500	Stator
51	Top Cover	325	Hex Socket Head Bolt	501	Rotor
55	Casing Cover	326	Hexagon Head Bolt	600	Electrode
60	Shaft	328	Hex Socket Head Bolt	601	Gland Cable Clamp
70	Circulation Impeller	329	Hex Socket Head Bolt	602	Glen (Cablo)
80	Shredder Vane	331	Hex Socket Head Bolt	603	Cable
200	Top Bearing	332	Hexagon Head Bolt	604	Plug
201	Bottom Bearing	333	Hex Socket Head Bolt	607	Gasket
209	Impeller Key	334	Hex Socket Head Bolt	609	Foot Support

14. EXPLODED IMAGE AND PARTS LIST

For Type-D

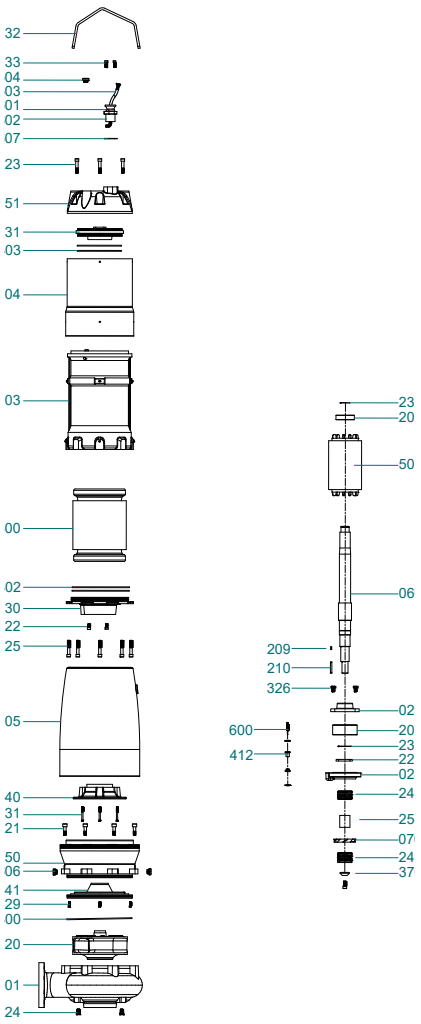

Part No	Part Name	Part No	Part Name	Part No	Part Name
1	Volute Casing	201	Bottom Bearing	333	Hex Socket Head Bolt
3	Motor Casing	209	Impeller Key	370	Impeller Washer
4	Inner Cooling Jacket	210	Key	400	O-Ring
5	External Cooling Jacket	220	Oil Seal	402	O-Ring
20	Impeller	231	Retaining Ring	403	O-Ring
28	Bottom Bearing Cover	232	Retaining Ring	412	Gasket Electrode
29	Top Bearing Cover	240	Mechanical Seal	500	Stator
30	Lower Bearing Housing	250	Spacer	501	Rotor
31	Top Bearing Housing	321	Hex Socket Head Bolt	600	Electrode
32	Lifting Handle	322	Hex Socket Head Bolt	601	Gland Cable Clamp
40	Labyrinth Cover	323	Hex Socket Head Bolt	602	Glen (Cablo)
41	Labyrinth	324	Hex Socket Head Bolt	603	Cable
50	Adapter	325	Hex Socket Head Bolt	604	Plug
51	Top Cover	326	Hexagon Head Bolt	606	Plug
60	Shaft	329	Hex Socket Head Bolt	607	Gasket
70	Circulation Impeller	331	Hex Socket Head Bolt	609	Foot Support
200	Top Bearing	332	Hexagon Head Bolt		
80	Shredder Vane	331	Hex Socket Head Bolt	603	Cable
200	Top Bearing	332	Hexagon Head Bolt	604	Plug
201	Bottom Bearing	333	Hex Socket Head Bolt	607	Gasket
209	Impeller Key	334	Hex Socket Head Bolt	609	Foot Support

For Type-P

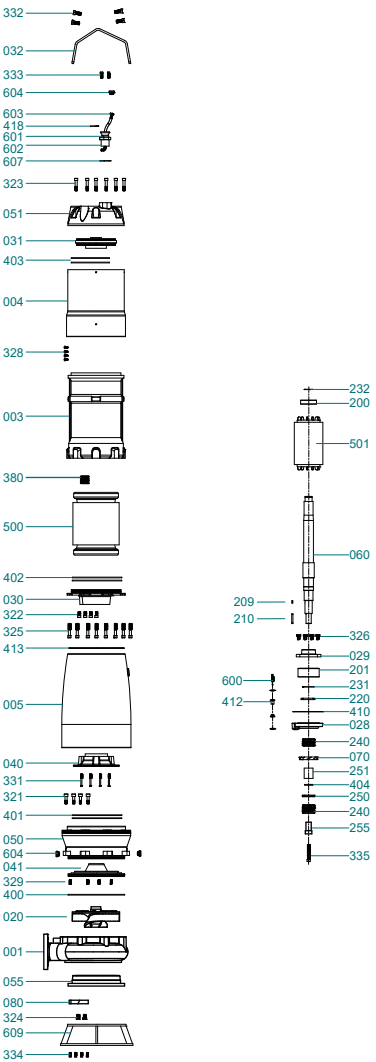
332
032
333
604
603
418
601
602
607
323
051
031
403
004
328
003
380
500
402
030
322
325
413
005
040
331
321
401
050
604
041
329
400
020
001
055
080
324
609
334
232
200
501
060
209
210
326
029
201
600
231
412
220
410
028
240
070
251
404
250
240
255
335

Part No	Part Name	Part No	Part Name	Part No	Part Name
1	Volute Casing	209	Impeller Key	334	Hex Socket Head Bolt
3	Motor Casing	210	Key	335	Impeller Clamping Bolt
4	Inner Cooling Jacket	220	Oil Seal	380	Setsrew
5	External Cooling Jacket	231	Retaining Ring	400	O-Ring
20	Impeller	232	Retaining Ring	402	O-Ring
28	Bottom Bearing Cover	240	Mechanical Seal	403	O-Ring
29	Top Bearing Cover	250	Spacer	404	O-Ring
30	Bottom Bearing Housing	251	Seal Sleeve	410	Cylinder Head Gasket
31	Top Bearing Housing	255	Impeller Washer	412	Gasket Electrode
32	Lifting Handle	321	Hex Socket Head Bolt	413	Gasket
40	Labyrinth Cover	322	Hexagon Head Bolt	418	Gasket
41	Labyrinth	323	Hex Socket Head Bolt	500	Stator
50	Adapter	324	Hex Socket Head Bolt	501	Rotor
51	Top Cover	325	Hex Socket Head Bolt	600	Electrode
55	Casing Cover	326	Hexagon Head Bolt	601	Gland Cable Clamp
60	Shaft	328	Hex Socket Head Bolt	602	Glen (Cablo)
70	Circulation Impeller	329	Hex Socket Head Bolt	603	Cable
80	Shredder Vane	331	Hex Socket Head Bolt	604	Plug
200	Top Bearing	332	Hexagon Head Bolt	607	Gasket
201	Bottom Bearing	333	Hex Socket Head Bolt	609	Foot Support
209	Impeller Key	334	Hex Socket Head Bolt	609	Foot Support

NOTES

masdaf.com

Call Center:
0850 888 8 627 (MAS)

Orta Mahallesi Atayolu Caddesi
No:16 Tuzla - İstanbul / Türkiye

masdaf.com